# DULUTH, GA - PEACHTREE INDUSTRIAL BLVD

## TRT ID: 27314

## SITE ADDRESS:

## 2220 PEACHTREE INDUSTRIAL BLVD
## DULUTH, GA 30097

### SITE INFORMATION

PROPOSED TESLA EV SITE ADDRESS:
2220 PEACHTREE INDUSTRIAL BLVD
DULUTH, GA 30097

PROPERTY OWNER:
SRA/SUGARLOAF MARKETPLACE LLC
5345 PINE TREE DR
MIAMI, FL 33140

PARCEL ID:
PARCEL ID: R7205 032

POWER COMPANY:
GEORGIA POWER
CONTACT: MICHAEL BUSSMAN
EMAIL: MBUSSMAN@SOUTHERNCO.COM
WORK ORDER: TBD

COUNTY:
GWINNETT COUNTY

LATITUDE*:
34° 01' 14.87" N

LONGITUDE*:
84° 07' 11.29" W
*BASED ON GOOGLE EARTH

CONTACT ENGINEER:
MATTHEW SELKIRK, P.E.
DEWBERRY ENGINEERS INC.
(804) 205-3361
mselkirk@Dewberry.com

### CONTRACTOR NOTE

CONTRACTOR SHALL COMPLETE INSTALL PER THE SIGNED AND SEALED SET OF DRAWINGS. ANY NECESSARY DEVIATIONS FROM THE DRAWINGS MUST BE SUBMITTED THROUGH AN RFI REQUEST PROCESS WITH ENGINEERING FOR AN APPROVAL PRIOR TO CONTRACTOR PROCEEDING WITH A DEVIATION OF THE SIGNED AND SEALED SET OF DRAWINGS.

### APPLICABLE CODES

ALL WORK SHALL COMPLY WITH THE FOLLOWING APPLICABLE CODES:

GEORGIA STATE UNIFORM BUILDING & ENERGY CODES, CONSISTENT WITH THE FOLLOWING CODES:

2018 INTERNATIONAL BUILDING CODE (IBC) WITH GEORGIA AMENDMENTS (2020)
2015 INTERNATIONAL ENERGY CONSERVATION CODE (IECC) WITH GEORGIA SUPPLEMENTS & AMENDMENTS (2020)
2020 NATIONAL ELECTRIC CODE (NEC).

IN THE EVENT OF CONFLICT, THE MOST RESTRICTIVE CODE SHALL PREVAIL.

### PROJECT DESCRIPTION

- INSTALL PAD MOUNTED UTILITY TRANSFORMER
- INSTALL (1) 1600A SWITCHGEAR
- INSTALL (3) TESLA SUPERCHARGER CABINETS
- INSTALL (12) TESLA STANDALONE CHARGE POSTS

### ZONING INFORMATION

PERMITTING JURISDICTION: CITY OF DULUTH
APN: R7205 032

### AERIAL MAP

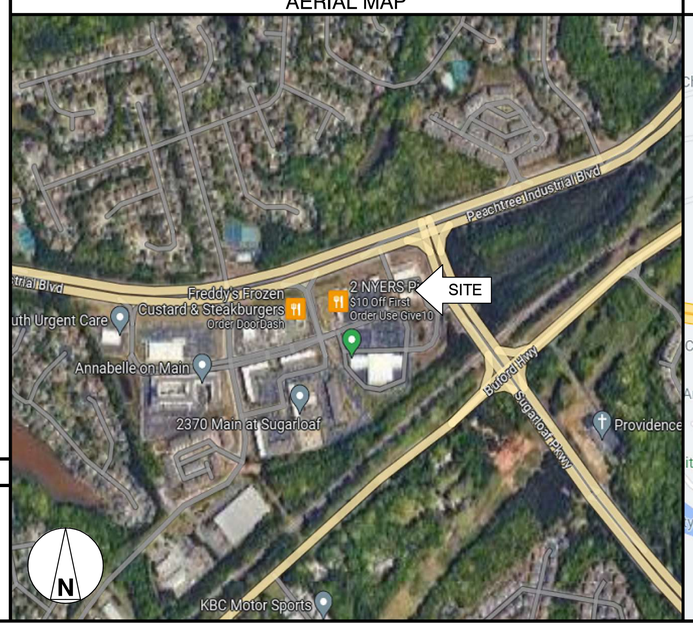


### LOCATION MAP

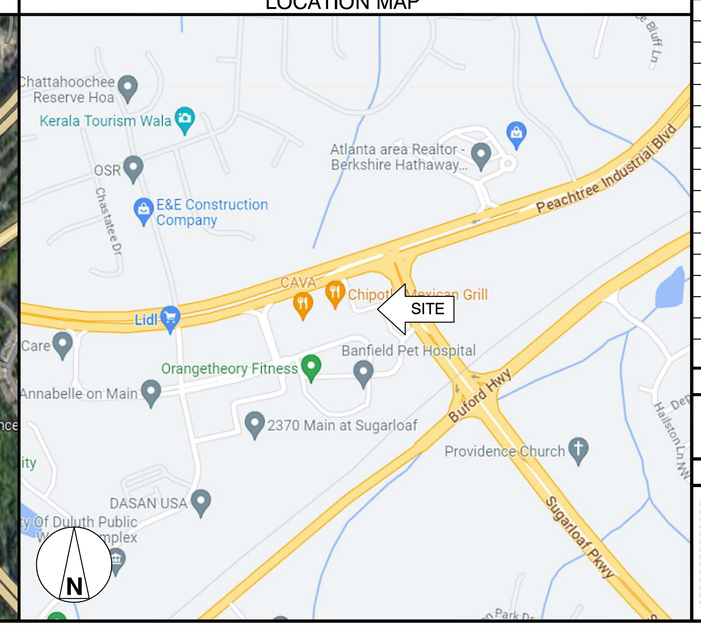


### DRAWING INDEX


| SHT. NO. | SHEET TITLE |
|---|---|
| T-1 | TITLE SHEET |
| GN-1 | GENERAL NOTES I |
| GN-2 | GENERAL NOTES II |
| C-1 | DETAILED SITE PLAN |
| C-2 | EXISTING CONDITIONS PLAN |
| C-3 | EQUIPMENT/PARKING PLAN |
| C-4 | GRADING PLAN |
| C-5 | CONSTRUCTION DETAILS I |
| C-6 | CONSTRUCTION DETAILS II |
| C-7 | CONSTRUCTION DETAILS III |
| C-8 | CONSTRUCTION DETAILS IV |
| E-1 | ELECTRICAL ONE-LINE DIAGRAM |
| E-2 | ELECTRICAL & UTILITY DETAILS |
| E-3 | ARC FLASH LABELS |
| G-1 | GROUNDING PLAN, SCHEMATIC & DETAILS |


### BEFORE SCALING

CONTRACTOR SHALL VERIFY ALL PLANS AND EXISTING DIMENSIONS AND CONDITIONS ON THE JOB SITE AND SHALL IMMEDIATELY NOTIFY THE TESLA REPRESENTATIVE IN WRITING OF DISCREPANCIES BEFORE PROCEEDING WITH THE WORK OR BE RESPONSIBLE FOR SAME.

### CALL BEFORE YOU DIG

GEORGIA811
www.Georgia811.com
Contact 811 before you dig.

GEORGIA 811

811 OR 1-800-282-7411


TESLA
3500 DEER CREEK ROAD
PALO ALTO, CA 94304
(650) 681-5000

Dewberry
Dewberry Engineers Inc.
2835 BRANDYWINE ROAD
SUITE 100
ATLANTA, GA 30341-4015
PHONE: 678.530.002
GA LIC. NO. PEF002398 (6/30/2024)


GEORGIA REGISTERED No. PE045736 PROFESSIONAL ENGINEER MATTHEW C. SELKIRK
05/26/23

| | |
|---|---|
| DRAWN BY: | WG |
| CHECKED BY: | DSW |
| APPROVED BY: | MCS |
| PROJECT #: | 50123704 |
| JOB #: | 50163344 |

### SUBMITTALS

| REV. | DATE | DESCRIPTION |
|---|---|---|
| 0 | 05/26/23 | ISSUED FOR S&S |
| B | 05/17/23 | ISSUED FOR 90% REVIEW |
| A | 05/09/23 | ISSUED FOR 90% REVIEW |

SITE NAME:
DULUTH, GA – PEACHTREE INDUSTRIAL BLVD
(TRT ID: 27314)

SITE ADDRESS:
2220 PEACHTREE INDUSTRIAL BLVD
DULUTH, GA 30097

SHEET TITLE

TITLE SHEET

SHEET NUMBER

T-1

## GENERAL NOTES:

1. FOR THE PURPOSE OF CONSTRUCTION DRAWING, THE FOLLOWING DEFINITIONS SHALL APPLY:
   GENERAL CONTRACTOR(s) OR SUB–CONTRACTOR(s) – CIVIL CONTRACTOR AND/OR ELECTRICIAN CONTRACTOR
   PROJECT OWNER/CONSTRUCTION MANAGER – TESLA
   PROJECT HOST – LEGAL PROPERTY OWNER
   ENGINEER – DEWBERRY ENGINEERS INC.

2. PRIOR TO THE SUBMISSION OF BIDS, THE BIDDING THE GENERAL CONTRACTOR SHALL VISIT THE SITE TO FAMILIARIZE WITH THE EXISTING CONDITIONS AND TO CONFIRM THAT THE WORK CAN BE ACCOMPUSHED AS SHOWN ON THE CONSTRUCTION DRAWINGS. ANY DISCREPANCY FOUND SHALL BE BROUGHT TO THE ATTENTION OF PROJECT OWNER PRIOR TO THE COMMENCEMENT OF WORK.

3. ALL MATERIALS FURNISHED AND INSTALLED SHALL BE IN STRICT ACCORDANCE WITH ALL APPLICABLE CODES, REGULATIONS, AND ORDINANCES. THE GENERAL CONTRACTOR SHALL ISSUE ALL APPROPRIATE NOTICES AND COMPLY WITH ALL LAWS, ORDINANCES, RULES, REGULATIONS, AND LAWFUL ORDERS OF ANY PUBLIC AUTHORITY REGARDING THE PERFORMANCE OF THE WORK.

4. ALL WORK CARRIED OUT SHALL COMPLY WITH ALL APPLICABLE MUNICIPAL AND UTILITY COMPANY SPECIFICATIONS AND LOCAL JURISDICTIONAL CODES, ORDINANCES AND APPLICABLE REGULATIONS.

5. UNLESS NOTED OTHERWISE, THE WORK SHALL INCLUDE FURNISHING MATERIALS, EQUIPMENT, APPURTENANCES, AND LABOR NECESSARY TO COMPLETE THE INSTALLATION AS INDICATED ON THE DRAWINGS FOR A FULLY FUNCTIONAL CHARGING STATION AND COMPLETE PROJECT.

6. THE SUB–CONTRACTOR SHALL INSTALL ALL EQUIPMENT AND MATERIALS IN ACCORDANCE WITH MANUFACTURER'S RECOMMENDATIONS UNLESS SPECIFICALLY STATED OTHERWISE.

7. IF THE SPECIFIED EQUIPMENT CANNOT BE INSTALLED AS SHOWN ON DRAWINGS, THE GENERAL CONTRACTOR SHALL PROPOSE AN ALTERNATIVE INSTALLATION SPACE FOR APPROVAL BY THE PROJECT ENGINEER. ONLY WRITTEN APPROVALS SHALL BE DEEMED TO CONFIRM ANY SUCH CHANGES AS BEING APPROVED.

8. PLANS ARE NOT TO BE SCALED. THESE PLANS ARE INTENDED TO BE A DIAGRAMMATIC OUTLINE ONLY UNLESS OTHERWISE NOTED. DIMENSIONS SHOWN ARE TO FINISH SURFACES UNLESS OTHERWISE NOTED. SPACING BETWEEN EQUIPMENT IS THE MINIMUM REQUIRED CLEARANCE. THEREFORE, IT IS CRITICAL TO FIELD VERIFY DIMENSIONS, SHOULD THERE BE ANY QUESTIONS REGARDING THE CONTRACT DOCUMENTS, THE GENERAL CONTRACTOR SHALL BE RESPONSIBLE FOR OBTAINING A CLARIFICATION FROM THE ENGINEER PRIOR TO PROCEEDING WITH THE WORK. DETAILS ARE INTENDED TO SHOW DESIGN INTENT. MODIFICATIONS MAY BE REQUIRED TO SUIT UNIQUE JOB DIMENSIONS OR CONDITIONS AND SUCH MODIFICATIONS SHALL BE INCLUDED AS PART OF WORK.

9. THE GENERAL CONTRACTOR SHALL REVIEW ROUTING OF CONDUIT, POWER AND GROUNDING CABLES AS SHOWN ON THE POWER, GROUNDING PLAN DRAWING. THE GENERAL CONTRACTOR SHALL CONFIRM THE ACTUAL ROUTING WITH THE CONSTRUCTION MANAGER AND PROJECT HOST.

10. INFORMATION SHOWN ON THESE DRAWINGS WAS OBTAINED FROM SITE VISITS AND/OR DRAWINGS PROVIDED BY THE PROJECT HOST. THE GENERAL CONTRACTOR SHALL VERIFY ALL EXISTING DIMENSIONS AND CONDITIONS AND SHALL NOTIFY THE ENGINEER OF ANY DISCREPANCIES PRIOR TO ORDERING MATERIAL OR PROCEEDING WITH CONSTRUCTION.

11. THE GENERAL CONTRACTOR SHALL BE RESPONSIBLE FOR OBTAINING ALL PERMITS AND INSPECTIONS REQUIRED FOR CONSTRUCTION. IF GENERAL CONTRACTOR CANNOT OBTAIN A PERMIT, THEY MUST NOTIFY THE CONSTRUCTION MANAGER IMMEDIATELY.

12. APPLICABLE BUILDING CODES:
    THE GENERAL CONTRACTORS WORK SHALL COMPLY WITH ALL APPLICABLE NATIONAL, STATE, AND LOCAL CODES AS ADOPTED BY THE LOCAL AUTHORITY HAVING JURISDICTION (AHJ) FOR THE LOCATION. THE EDITION OF THE AHJ ADOPTED CODES AND STANDARDS IN EFFECT ON THE DATE OF CONTRACT AWARD SHALL GOVERN THE DESIGN.
    THE GENERAL CONTRACTOR WORK SHALL COMPLY WITH THE LATEST EDITION OF THE FOLLOWING STANDARDS:
    AMERICAN CONCRETE INSTITUTE (ACI) 318; BUILDING CODE REQUIREMENTS FOR STRUCTURAL CONCRETE
    AMERICAN INSTITUTE OF STEEL CONSTRUCTION (AISC)
    MANUAL OF STEEL CONSTRUCTION, ASD, FOURTEENTH EDITION

13. FOR ANY CONFLICTS BETWEEN SECTIONS OF LISTED CODES AND STANDARDS REGARDING MATERIAL, METHODS OF CONSTRUCTION, OR OTHER REQUIREMENTS, THE MOST RESTRICTIVE REQUIREMENT SHALL GOVERN. WHERE THERE IS CONFLICT BETWEEN A GENERAL REQUIREMENT AND A SPECIFIC REQUIREMENT, THE SPECIFIC REQUIREMENT SHALL GOVERN.

14. THE GENERAL CONTRACTOR SHALL MAINTAIN IN GOOD CONDITION ONE COMPLETE SET OF PLANS WITH ALL REVISIONS, ADDENDA, AND CHANGE ORDERS ON THE PREMISES AT ALL TIMES.

15. THE GENERAL CONTRACTOR SHALL COORDINATE WORK AND SCHEDULE WORK ACTIVITIES WITH OTHER GENERAL CONTRACTOR(S) AND/OR SUB–CONTRACTOR(S).

16. CONSTRUCTION SHALL BE DONE IN A WORKMANLIKE MANNER BY COMPETENT EXPERIENCED WORKMEN IN ACCORDANCE WITH APPLICABLE CODES AND THE BEST ACCEPTED PRACTICE.

17. THE GENERAL CONTRACTOR SHALL COORDINATE AND MAINTAIN ACCESS FOR ALL TRADES AND GENERAL CONTRACTOR(S) AND/OR SUB–CONTRACTOR(S) TO THE SITE AND/OR BUILDING.

18. THE GENERAL CONTRACTOR SHALL BE RESPONSIBLE FOR SECURITY OF THE SITE FOR THE DURATION OF CONSTRUCTION UNTIL JOB COMPLETION.

19. THE GENERAL CONTRACTOR SHALL CONTACT UTILITY LOCATING SERVICES PRIOR TO THE START OF CONSTRUCTION.

20. THE GENERAL CONTRACTOR SHALL PROVIDE WRITTEN NOTICE TO THE PROJECT HOST 48 HOURS PRIOR TO COMMENCEMENT OF WORK.

21. THE GENERAL CONTRACTOR AND SUB–CONTRACTORS SHALL BE RESPONSIBLE FOR THE SAFETY OF WORK AREA, ADJACENT AREAS AND BUILDING OCCUPANTS THAT ARE LIKELY TO BE AFFECTED BY THE WORK UNDER THIS CONTRACT. WORK SHALL CONFORM TO ALL OSHA REQUIREMENTS AND THE LOCAL JURISDICTION.

22. THE GENERAL CONTRACTOR SHALL PROVIDE PORTABLE FIRE EXTINGUISHERS WITH A RATING OF NOT LESS THAN 2–A OR 2–A:10–B:C AND SHALL BE WITHIN 25 FEET OF TRAVEL DISTANCE TO ALL PORTIONS OF WHERE THE WORK IS BEING COMPLETED DURING CONSTRUCTION.

23. ALL BROCHURES, OPERATING AND MAINTENANCE MANUALS, CATALOGS, SHOP DRAWINGS, AND OTHER DOCUMENTS SHALL BE TURNED OVER TO THE PROJECT OWNER AT COMPLETION OF CONSTRUCTION AND PRIOR TO PAYMENT.

24. GENERAL CONTRACTOR SHALL SUBMIT A COMPLETE SET OF AS–BUILT REDLINES AND ALL SPECIFIED CLOSE–OUT DOCUMENTATION TO THE PROJECT OWNER UPON COMPLETION OF PROJECT AND PRIOR TO FINAL PAYMENT.

25. THE GENERAL CONTRACTOR SHALL LEAVE THE WORK AREA AND SURROUNDING PREMISES IN A CLEAN CONDITION.

26. THE PROPOSED FACILITY WILL BE UNMANNED AND DOES NOT REQUIRE POTABLE WATER OR SEWER SERVICE, AND IS NOT FOR HUMAN HABITATION (NO HANDICAP ACCESS REQUIRED).

27. NO OUTDOOR STORAGE OR SOLID WASTE CONTAINERS ARE PROPOSED.

## SITE WORK NOTES:

PART 1 – GENERAL

1.1 REFERENCES:
- A. DOT (STATE DEPARTMENT OF TRANSPORTATION STANDARD SPECIFICATIONS FOR HIGHWAY CONSTRUCTION–CURRENT EDITION).
- B. AASHTO (AMERICAN ASSOCIATION OF STATE HIGHWAY AND TRANSPORTATION OFFICIALS)
- C. ASTM (AMERICAN SOCIETY FOR TESTING AND MATERIALS).
- D. OSHA (OCCUPATION SAFETY AND HEALTH ADMINISTRATION).

1.2 INSPECTION AND TESTING:
- A. FIELD TESTING OF EARTHWORK COMPACTION AND CONCRETE CYLINDERS SHALL BE PERFORMED BY AN INDEPENDENT TESTING LAB. THIS WORK IS TO BE COORDINATED BY THE GENERAL CONTRACTOR.
- B. ALL WORK SHALL BE INSPECTED AND VERIFIED FOR CONFORMANCE AND RELEASED BY THE ENGINEER WHO SHALL CARRY OUT THE GENERAL INSPECTION OF THE WORK WITH SPECIFIC CONCERN TO PROPER PERFORMANCE OF THE WORK AS SPECIFIED AND/OR CALLED FOR ON THE DRAWINGS. IT IS THE GENERAL CONTRACTOR(S) RESPONSIBILITY TO REQUEST TIMELY INSPECTIONS PRIOR TO PROCEEDING WITH FURTHER WORK THAT WOULD MAKE PARTS OF WORK INACCESSIBLE OR DIFFICULT TO INSPECT.

1.3 SITE MAINTENANCE AND PROTECTION:
- A. PROVIDE ALL NECESSARY JOB SITE MAINTENANCE FROM COMMENCEMENT OF WORK UNTIL COMPLETION OF THE CONTRACT.
- B. AVOID DAMAGE AND TAKE PROTECTIVE MEASURES TO THE SITE AND TO EXISTING FACILITIES, IMPROVEMENTS, STRUCTURES, PAVEMENTS, CURBS, AND LANDSCAPING DESIGNATED TO REMAIN. ANY DAMAGED PART SHALL BE REPAIRED AT SUB–CONTRACTOR(S) EXPENSE TO THE SATISFACTION OF THE PROJECT HOST.
- C. KEEP SITE FREE OF ALL PONDING OR STANDING WATER.
- D. PROVIDE EROSION CONTROL MEASURES, IF REQUIRED, SHALL BE IN ACCORDANCE WITH STATE DOT, LOCAL PERMITTING AGENCY AND EPA REQUIREMENTS.
- E. PROVIDE AND MAINTAIN ALL TEMPORARY FENCING, BARRICADES, WARNING SIGNALS AND SIMILAR DEVICES NECESSARY TO PROTECT AGAINST THEFT FROM PROPERTY DURING THE ENTIRE PERIOD OF CONSTRUCTION. REMOVE ALL SUCH DEVICES UPON COMPLETION OF THE WORK.
- F. ALL EXISTING ACTIVE SEWER, WATER, GAS, ELECTRIC, AND OTHER UTILITIES SHALL BE PROTECTED AT ALL TIMES, AND WHERE REQUIRED FOR THE PROPER EXECUTION OF THE WORK, SHALL BE RELOCATED AS DIRECTED BY THE ENGINEER. EXTREME CAUTION SHOULD BE USED BY THE SUB–CONTRACTOR WHEN EXCAVATING OR DRILLING PIERS AROUND OR NEAR UTILITIES. THE GENERAL CONTRACTOR SHALL PROVIDE SAFETY TRAINING FOR THE WORKING CREW. THIS SHALL INCLUDE BUT NOT BE LIMITED TO A) FALL PROTECTION, B) CONFINED SPACE, C) ELECTRICAL SAFETY, AND D) TRENCHING & EXCAVATION.
- G. ALL EXISTING INACTIVE SEWER, WATER, GAS, ELECTRIC, AND OTHER UTILITIES, WHICH INTERFERE WITH THE EXECUTION OF THE WORK, SHALL BE REMOVED, CAPPED, PLUGGED OR OTHERWISE DISCONNECTED AT POINTS WHICH WILL NOT INTERFERE WITH THE EXECUTION OF THE WORK, AS DIRECTED BY THE ENGINEER, AND SUBJECT TO THE APPROVAL OF THE PROJECT OWNER AND/OR LOCAL UTILITIES.
- H. EXISTING UTILITIES: DO NOT INTERRUPT EXISTING UTILITIES SERVING FACILITIES OCCUPIED BY THE PROJECT HOST OR OTHERS, EXCEPT WHEN PERMITTED IN WRITING BY THE PROJECT HOST AND THEN ONLY AFTER ACCEPTABLE TEMPORARY UTILITY SERVICES HAVE BEEN PROVIDED.
- I. PROVIDE A MINIMUM 48–HOUR NOTICE TO THE PROJECT HOST AND RECEIVE WRITTEN NOTICE TO PROCEED BEFORE INTERRUPTING ANY UTILITY SERVICE.
- J. SOD PLANTED IN THE FALL MUST ESTABLISH ITS ROOTS BEFORE THE FIRST WINTER FROST. DETERMINE WHEN THE FIRST FROST USUALLY OCCURS, AND PLANT THE SOD NO LATER THAN ONE MONTH BEFORE THE FIRST FROST. IF THE CONSTRUCTION IS FINISHED LATER THAN ONE MONTH BEFORE THE FIRST FROST, USE STRAW UNTIL SOD CAN BE INSTALLED.
- K. THE GENERAL CONTRACTOR SHALL LEGALLY AND PROPERLY DISPOSE OF ALL SCRAP MATERIALS, RUBBISH, DEBRIS, STUMPS, STICKS, AND STONES.
- L. THE GENERAL CONTRACTOR SHALL REMOVE ALL TRASH DEBRIS FROM THE SITE ON A DAILY BASIS.
- M. CONTRACTOR TO TAKE NECESSARY PRECAUTIONS TO PROTECT TREES, VEGETATION, AND ROOT SYSTEMS DURING CONSTRUCTION.
- N. CONTRACTOR TO COORDINATE POST CONSTRUCTION LANDSCAPING FINISHES WITH OWNER AND TESLA.

PART 2 – PRODUCTS

2.1 GRANULAR BACKFILL: SHALL MEET THE FOLLOWING GRADATION:

| SIEVE SIZE | TOTAL PERCENT PASSING |
|---|---|
| 1–1/2 INCH | 100 |
| 1 INCH | 75 TO 100 |
| 3/4 INCH | 80 TO 100 |
| 3/8 INCH | 35 TO 75 |
| NO. 4 | 30 TO 60 |
| NO. 30 | 7 TO 30 |
| NO. 200 | 3 TO 15 |

2.2 GRANULAR BEDDING AND TRENCH BACKFILL: WELL–GRADED SAND MEETING THE GRADATION REQUIREMENTS OF ASTM D2487 (SE OR SW–SM).

2.3 ALL STRUCTURAL BACKFILL AND SUBBASE UNDER SLABS SHALL BE SELECT STRUCTURAL FILL MEETING THE GRADATION AND SOUNDNESS REQUIREMENTS IN ACCORDANCE WITH THE FOLLOWING:

| | SIEVE SIZE | TOTAL PERCENT PASSING |
|---|---|---|
| | 4 INCH | 100 |
| NO. 40 | 0 TO 70 | |
| NO. 200 | 0 TO 40 | |

2.4 MATERIALS SHALL BE SUBSTANTIALLY FREE OF SHALE OR OTHER SOFT, POOR DURABILITY PARTICLES. IF TESTING IS ELECTED BY PROJECT OWNER, MATERIAL WITH A MAGNESIUM SULFATE SOUNDNESS LOSS EXCEEDING 30% WILL BE REJECTED.

2.5 COARSE AGGREGATE FOR SUBBASE COURSE SHALL CONFORM TO ASTM D2940.

2.6 UNSUITABLE MATERIAL: HIGH AND MODERATELY PLASTIC SILTS AND CLAYS (LL>45). MATERIAL CONTAINING REFUSE, FROZEN LUMPS, DEMOLISHED BITUMINOUS MATERIAL, VEGETATIVE MATTER, WOOD, STONES IN EXCESS OF 3 INCHES IN ANY DIMENSION, AND DEBRIS AS DETERMINED BY THE ENGINEER. TYPICALLY THESE WILL BE SOILS CLASSIFIED BY ASTM AS PT, MH, CH, OH, ML, AND OL.

PART 3 – EXECUTION

3.1 GENERAL:
- A. BEFORE STARTING GENERAL SITE PREPARATION ACTIVITIES, INSTALL EROSION AND SEDIMENT CONTROL MEASURES. THE WORK AREA SHALL BE CONSTRUCTED AND MAINTAINED IN SUCH CONDITION THAT IN THE EVENT OF A RAIN EVENT, NO SEDIMENT WILL LEAVE THE WORK SITE.
- B. BEFORE ALL SURVEY, LAYOUT, STAKING, AND MARKING, ESTABLISH AND MAINTAIN ALL LINES, GRADES, ELEVATIONS AND BENCHMARKS NEEDED FOR EXECUTION OF THE WORK.
- C. CLEAR AND GRUB THE AREA WITHIN THE LIMITS OF THE SITE. REMOVE TREES, BRUSH, STUMPS, RUBBISH AND OTHER DEBRIS AND VEGETATION RESTING ON OR PROTRUDING THROUGH THE SURFACE OF THE SITE AREA TO BE CLEARED.
- D. REMOVE THE FOLLOWING MATERIALS TO A DEPTH OF NO LESS THAN 12 INCHES BELOW THE ORIGINAL GROUND SURFACE: ROOTS, STUMPS, AND OTHER DEBRIS, BRUSH, AND REFUSE EMBEDDED IN OR PROTRUDING THROUGH THE GROUND SURFACE, RAKE, DISK OR PLOW THE AREA TO A DEPTH OF NO LESS THAN 6 INCHES, AND REMOVE TO A DEPTH OF 12 INCHES ALL ROOTS AND OTHER DEBRIS THEREBY EXPOSED.
- E. REMOVE TOPSOIL MATERIAL COMPLETELY FROM THE SURFACE UNTIL THE SOIL NO LONGER MEETS THE DEFINITION OF TOPSOIL. AVOID MIXING TOPSOIL WITH SUBSOIL OR UNDESIRABLE MATERIALS.
- F. EXCEPT WHERE EXCAVATION TO GREATER DEPTH IS INDICATED, FILL DEPRESSIONS RESULTING FROM CLEARING, GRUBBING AND DEMOLITION WORK COMPLETELY WITH GRANULAR FILL.
- G. REMOVE FROM THE SITE AND DISPOSE IN AN AUTHORIZED LANDFILL ALL DEBRIS RESULTING FROM CLEARING AND GRUBBING OPERATIONS. BURNING WILL NOT BE PERMITTED.
- H. PRIOR TO EXCAVATING, THOROUGHLY EXAMINE THE AREA TO BE EXCAVATED AND/OR TRENCHED TO VERIFY THE LOCATIONS OF FEATURES INDICATED ON THE DRAWINGS AND TO ASCERTAIN THE EXISTENCE AND LOCATION OF ANY STRUCTURE, UNDERGROUND STRUCTURE, OR OTHER ITEM NOT SHOWN THAT MIGHT INTERFERE WITH THE PROPOSED CONSTRUCTION. NOTIFY THE ENGINEER OF ANY OBSTRUCTIONS THAT WILL PREVENT ACCOMPLISHMENT OF THE WORK AS INDICATED ON THE DRAWINGS.
- I. SEPARATE AND STOCK PILE ALL EXCAVATED MATERIALS SUITABLE FOR BACKFILL. ALL EXCESS EXCAVATED AND UNSUITABLE MATERIALS SHALL BE DISPOSED OF OFF–SITE IN A LEGAL MANNER.
- J. DURING EXCAVATION, THE SUB–CONTRACTOR SHALL PROVIDE SHORING, SHEETING, AND BRACING AS REQUIRED TO PREVENT CAVING OR SLOUGHING OF EXCAVATION.
- K. WHEN DIRECTIONAL BORING IS REQUIRED, SUB–CONTRACTOR SHALL INSTALL A LOOSE TONING WIRE WITHIN INSTALLED CONDUIT TO ALLOW FOR IDENTIFICATION OF UNDERGROUND CONDUITS.

3.2 BACKFILL:
- A. AS SOON AS PRACTICAL, AFTER COMPLETING CONSTRUCTION OF THE RELATED STRUCTURE, INCLUDING EXPIRATION OF THE SPECIFIED MINIMUM CURING PERIOD FOR CAST–IN–PLACE CONCRETE, BACKFILL THE EXCAVATION WITH SPECIFIED MATERIAL TO RESTORE THE REQUIRED FINISHED GRADE.
- B. PRIOR TO PLACING BACKFILL AROUND STRUCTURES, ALL FORMS SHALL BE REMOVED AND THE EXCAVATION CLEANED OF ALL TRASH, DEBRIS, AND UNSUITABLE MATERIALS.
- C. NO FILL OR EMBANKMENT MATERIAL SHALL BE PLACED ON FROZEN GROUND. FROZEN MATERIALS, SNOW, OR ICE SHALL NOT BE PLACED IN ANY FILL OR EMBANKMENT.
- D. BACKFILL BY PLACING AND COMPACTING SUITABLE BACKFILL MATERIAL OR SELECT GRANULAR BACKFILL MATERIAL WHEN REQUIRED IN UNIFORM HORIZONTAL LAYERS OF NO GREATER THAN 12–INCHES LOOSE THICKNESS AND COMPACTED. WHERE HAND OPERATED COMPACTORS ARE USED, FILL MATERIAL SHALL BE PLACED IN LIFTS NOT TO EXCEED 12–INCHES IN LOOSE DEPTH AND COMPACTED.
- E. THOROUGHLY COMPACT EACH LAYER OF BACKFILL TO A MINIMUM OF 95 PERCENT OF THE MAXIMUM DRY DENSITY AS ESTABLISHED BY THE STANDARD PROCTOR TEST, ASTM D 698.
- F. WHENEVER THE DENSITY TESTING INDICATES THAT THE SUB–CONTRACTOR(S) HAS NOT OBTAINED THE SPECIFIED DENSITY, THE SUCCEEDING LAYER SHALL NOT BE PLACED UNTIL THE SPECIFICATION REQUIREMENTS ARE MET UNLESS OTHERWISE AUTHORIZED BY THE CONSTRUCTION MANAGER. THE SUB–CONTRACTOR SHALL TAKE WHATEVER APPROPRIATE ACTION IS NECESSARY, SUCH AS DISKING AND DRYING, ADDING WATER, OR INCREASING THE COMPACTIVE EFFORT TO MEET THE MINIMUM COMPACTION REQUIREMENTS.
- G. THE SUB–CONTRACTOR SHALL OBTAIN GRAB SAMPLES OF SUFFICIENT QUANTITY TO PROVIDE TO LAB FOR PURPOSE OF DETERMINING MAX DRY DENSITY. ALL LOOSE AND/OR ORGANIC MATERIAL SHALL BE REMOVED PRIOR TO PREPARATION OF THE AREA FOR PLACEMENT OF STRUCTURAL BACKFILL. OVERALL PLAN AREA OF WORK SHALL EXTEND 3'–0" MINIMUM BEYOND THE FINAL DIMENSIONS.
- H. SCARIFY THE EXISTING SOILS TO A DEPTH OF 6" AND RE–COMPACT USING A VIBRATING PLATE OR TAMPER, ANY SOFT AREAS SHALL BE OVEREXCAVATED 12" AND BACKFILLED WITH MATERIALS AND COMPACTION REQUIREMENTS SHOWN ON THE DRAWINGS.
- I. PLACEMENT AND COMPACTION OF STRUCTURAL BACKFILL AND SUBBASE SHALL BE IN 12" LIFTS. EXCAVATE FOR THE FOOTING EDGE AS SHOWN ON THE DRAWINGS.

3.3 TRENCHING EXCAVATION:
- J. UTILITY TRENCHES SHALL BE EXCAVATED TO THE LINES AND GRADES SHOWN ON THE DRAWINGS OR AS DIRECTED BY THE GENERAL CONTRACTOR. PROVIDE SHORING, SHEETING AND BRACING AS REQUIRED TO PREVENT CAVING OR SLOUGHING OF THE TRENCH WALLS.
- K. EXTEND THE TRENCH WIDTH A MINIMUM OF 6 INCHES BEYOND THE OUTSIDE EDGE OF THE OUTERMOST CONDUIT.
- L. WHEN SOFT YIELDING, OR OTHERWISE UNSTABLE SOIL CONDITIONS ARE ENCOUNTERED, EXCAVATE THE REQUIRED TRENCH TO A DEPTH OF NO LESS THAN 12 INCHES BELOW THE REQUIRED ELEVATION, THEN BACKFILL WITH 12" OF GRANULAR MATERIAL.

3.4 TRENCHING BACKFILL:
- A. PROVIDE GRANULAR BEDDING MATERIAL IN ACCORDANCE WITH THE DRAWINGS AND THE UTILITY REQUIREMENTS.
- B. NOTIFY THE ENGINEER 24 HOURS IN ADVANCE OF BACKFILLING.
- C. CONDUCT UTILITY CHECK TESTS BEFORE BACKFILLING. BACKFILL AND COMPACT TRENCH BEFORE ACCEPTANCE TESTING.
- D. PLACE GRANULAR BACKFILL UNIFORMLY ON BOTH SIDES OF THE CONDUITS IN 6–INCH UNCOMPACTED LIFTS UNTIL 12 INCHES OVER THE CONDUITS. SOLIDLY RAM AND TAMP BACKFILL INTO SPACE AROUND CONDUITS AND HAUNCHES.
- E. PROTECT CONDUIT FROM LATERAL MOVEMENT, IMPACT DAMAGE, OR UNBALANCED LOADING.
- F. ABOVE THE CONDUIT EMBEDMENT ZONE, PLACE AND COMPACT SATISFACTORY BACKFILL MATERIAL IN 12–INCH MAXIMUM LOOSE THICKNESS LIFTS TO RESTORE THE REQUIRED FINISHED SURFACE GRADE.
- G. COMPACT FINAL TRENCH BACKFILL TO A DENSITY EQUAL TO OR GREATER THAN THAT OF THE EXISTING UNDISTURBED MATERIAL IMMEDIATELY ADJACENT TO THE TRENCH BUT NO LESS THAN A MINIMUM OF 95 PERCENT OF THE MAXIMUM DRY DENSITY AS ESTABLISHED BY THE STANDARD PROCTOR TEST, ASTM D 698.
- H. PER LOCAL REGULATORY AUTHORITY AND AS APPLICABLE, ALL TRENCHES IN PUBLIC RIGHT–OF–WAY SHALL BE BACKFILLED WITH FLOWABLE FILL OR OTHER MATERIAL PRE–APPROVED BY THE LOCAL JURISDICTION.

3.5 FINISH GRADING:
- A. PERFORM ALL GRADING TO PROVIDE POSITIVE DRAINAGE AWAY FROM STRUCTURES AND SMOOTH, EVEN SURFACE DRAINAGE OF THE ENTIRE AREA WITHIN THE LIMITS OF CONSTRUCTION. GRADING SHALL MATCH SURROUNDING TOPOGRAPHY AND STRUCTURES.
- B. UTILIZE GRANULAR FILL RESULTING FROM THE EXCAVATION WORK IN THE CONSTRUCTION OF FILLS, EMBANKMENTS AND FOR REPLACEMENT OF REMOVED UNSUITABLE MATERIALS.
- C. REPAIR ALL ACCESS ROADS AND SURROUNDING AREAS USED DURING THE COURSE OF THIS WORK TO THEIR ORIGINAL OR BETTER CONDITION.
- D. AREAS OF THE PROJECT HOST'S PROPERTY DISTURBED BY THE WORK AND NOT COVERED BY THE EQUIPMENT OR PARKING/DRIVING AREAS SHALL BE GRADED TO A UNIFORM SLOPE AND STABILIZED TO PREVENT EROSION.

3.6 ASPHALT PAVING ROAD:
- A. AASHTO
- B. STATE SPECIFIC ASPHALT SPECIFICATIONS FOR HIGHWAYS
- C. THE SUB–CONTRACTOR IS RESPONSIBLE FOR RE–STRIPING AND APPLYING SEALCOATING, UNLESS OTHERWISE SPECIFIED.


TESLA
3500 DEER CREEK ROAD
PALO ALTO, CA 94304
(650) 681-5000

Dewberry®
Dewberry Engineers Inc.
2835 BRANDYWINE ROAD
SUITE 100
ATLANTA, GA 30341-4015
PHONE: 678.530.002
GA LIC. NO. PEF002398 (6/30/2024)


GEORGIA REGISTERED No. PE045736 PROFESSIONAL ENGINEER MATTHEW C. SELKIRK
05/26/23

| | |
|---|---|
| DRAWN BY: | WG |
| CHECKED BY: | DSW |
| APPROVED BY: | MCS |
| PROJECT #: | 50123704 |
| JOB #: | 50163344 |

SUBMITTALS

| REV. | DATE | DESCRIPTION |
|---|---|---|
| | | |
| | | |
| | | |
| | | |
| | | |
| | | |
| | | |
| 0 | 05/26/23 | ISSUED FOR S&S |
| B | 05/17/23 | ISSUED FOR 90% REVIEW |
| A | 05/09/23 | ISSUED FOR 90% REVIEW |

SITE NAME:
DULUTH, GA – PEACHTREE INDUSTRIAL BLVD
(TRT ID: 27314)

SITE ADDRESS:
2220 PEACHTREE INDUSTRIAL BLVD
DULUTH, GA 30097

SHEET TITLE
GENERAL NOTES I

SHEET NUMBER
GN–1

## ELECTRICAL NOTES:

1. THE GENERAL CONTRACTOR SHALL SUPPLY AND INSTALL ANY/ALL ELECTRICAL WORK INDICATED. ANY/ALL CONSTRUCTION SHALL BE IN ACCORDANCE WITH DRAWINGS. ANY/ALL APPLICABLE SPECIFICATIONS. IF ANY PROBLEMS ARE ENCOUNTERED BY COMPLYING WITH THESE REQUIREMENTS, SUB–CONTRACTOR SHALL NOTIFY THE PROJECT HOST AS SOON AS POSSIBLE, AFTER THE DISCOVERY OF THE PROBLEMS, AND SHALL NOT PROCEED WITH THAT PORTION OF WORK, UNTIL THE PROJECT HOST HAS DIRECTED THE CORRECTIVE ACTIONS TO BE TAKEN.

2. THE GENERAL CONTRACTOR SHALL VISIT THE JOB SITE AND FAMILIARIZE HIMSELF WITH ANY/ALL CONDITIONS AFFECTING ELECTRICAL AND COMMUNICATION INSTALLATION AND MAKE PROVISIONS AS TO THE COST THEREOF. ALL EXISTING CONDITIONS OF ELECTRICAL EQUIPMENT, LIGHT FIXTURES, ETC., THAT ARE PART OF THE FINAL SYSTEM, SHALL BE VERIFIED BY THE SUB–CONTRACTOR, PRIOR TO THE SUBMITTAL OF HIS BID. FAILURE TO COMPLY WITH THIS PARAGRAPH WILL IN NO WAY RELIEVE THE SUBCONTRACTOR OF PERFORMING ALL WORK NECESSARY FOR A COMPLETE AND WORKING SYSTEM.

3. ALL WORK SHALL BE PERFORMED IN ACCORDANCE WITH THE LATEST EDITION OF THE NEC AND ALL CODES AND LOCAL ORDINANCES OF THE LOCAL POWER COMPANIES HAVING JURISDICTION AND SHALL INCLUDE BUT NOT BE LIMITED TO:

A. UL – UNDERWRITERS LABORATORIES
B. NEC – NATIONAL ELECTRICAL CODE
C. NEMA – NATIONAL ELECTRICAL MANUFACTURERS ASSOC.
D. OSHA – OCCUPATIONAL SAFETY AND HEALTH ADMINISTRATION
E. SBC – STANDARD BUILDING CODE
F. NFPA – NATIONAL FIRE PROTECTION ASSOCIATION

4. DO NOT SCALE ELECTRICAL DRAWINGS, REFER TO SITE PLANS AND ELEVATIONS FOR EXACT LOCATIONS OF ALL EQUIPMENT, AND CONFIRM WITH ENGINEER ANY SIZES AND LOCATIONS WHEN NEEDED.

5. EXISTING SERVICES: THE GENERAL CONTRACTOR SHALL NOT INTERRUPT EXISTING SERVICES WITHOUT WRITTEN PERMISSION OF THE PROJECT HOST.

6. THE GENERAL CONTRACTOR SHALL PAY FOR ANY/ALL PERMITS, FEES, INSPECTIONS AND TESTING. THE GENERAL CONTRACTOR IS TO OBTAIN PERMITS AND APPROVED SUBMITTALS PRIOR TO THE WORK BEGINNING OR ORDERING EQUIPMENT.

7. THE TERM "PROVIDE" USED IN CONSTRUCTION DOCUMENTS AND SPECIFICATIONS, INDICATES THAT THE CONTRACTOR SHALL FURNISH AND INSTALL, UNLESS OTHERWISE SPECIFIED BY CONSTRUCTION MANAGER OR BY PROJECT DEVELOPER.

8. THE GENERAL CONTRACTOR SHALL CONFIRM WITH LOCAL UTILITY COMPANY ANY/ALL REQUIREMENTS SUCH AS THE: LUG SIZE RESTRICTIONS, CONDUIT ENTRY, SIZE OF TRANSFORMERS, SCHEDULED DOWNTIME FOR THE PROJECT HOST'S CONFIRMATION, ETC. ANY/ALL CONFLICTS SHALL BE BROUGHT TO THE ATTENTION OF THE CONSTRUCTION MANAGER, PRIOR TO BEGINNING ANY WORK.

9. CONDUCTORS: THE CONTRACTOR SHALL USE 98% CONDUCTIVITY COPPER OR ALUMINUM WITH TYPE (THWN–2) INSULATION, 600 VOLT, COLOR CODED UNLESS SPECIFIED DIFFERENTLY ON DRAWINGS.

10. ALL (THWN–2) WIRING INSTALLATIONS TO FOLLOW MANUFACTURER'S INSTRUCTIONS AND RECOMMENDATIONS.

11. OUTLET BOXES SHALL BE PRESSED STEEL IN DRY LOCATIONS, CAST ALLOY WITH THREADED HUBS IN WET/DAMP LOCATIONS AND SPECIAL ENCLOSURES FOR OTHER CLASSIFIED AREAS.

12. IT IS NOT THE INTENT OF THESE PLANS TO SHOW EVERY MINOR DETAIL OF THE CONSTRUCTION. CONTRACTOR IS EXPECTED TO FURNISH AND INSTALL ALL ITEMS FOR A COMPLETE ELECTRICAL SYSTEM AND PROVIDE ALL REQUIREMENTS FOR THE EQUIPMENT TO BE PLACED IN PROPER WORKING ORDER. SUB–CONTRACTOR IS TO PROVIDE ALL ELECTRICAL EQUIPMENT UNLESS OTHERWISE DIRECTED.

13. ALL WORK SHALL BE PERFORMED BY A LICENSED ELECTRICAL SUB–CONTRACTOR IN A FIRST CLASS, WORKMANLIKE MANNER. THE COMPLETED SYSTEM SHALL BE FULLY OPERATIVE AND SUBJECT TO REGULATORY INSPECTION AND APPROVAL BY THE CONSTRUCTION MANGER.

14. ALL WORK SHALL BE COORDINATED WITH OTHER TRADES TO AVOID INTERFERENCE WITH THE PROGRESS OF CONSTRUCTION.

15. THE GENERAL CONTRACTOR SHALL GUARANTEE ANY/ALL MATERIALS AND WORK FREE FROM DEFECTS FOR A PERIOD OF NOT LESS THAN ONE YEAR FROM DATE OF ACCEPTANCE.

16. THE CORRECTION OF ANY DEFECTS SHALL BE COMPLETED WITHOUT ANY ADDITIONAL CHARGE AND SHALL INCLUDE THE REPLACEMENT OR THE REPAIR OF ANY OTHER PHASE OF THE INSTALLATION, WHICH MAY HAVE BEEN DAMAGED THEREIN.

17. ADEQUATE AND REQUIRED LIABILITY INSURANCE SHALL BE PROVIDED FOR PROTECTION AGAINST PUBLIC LOSS AND ANY/ALL PROPERTY DAMAGE FOR THE DURATION OF WORK.

18. MATERIALS, PRODUCTS AND EQUIPMENT, INCLUDING ALL COMPONENTS THEREOF, SHALL BE NEW AND SHALL APPEAR ON THE LIST OF U.L. APPROVED ITEMS AND SHALL MEET OR EXCEED THE REQUIREMENTS OF THE NEC, NEMA AND IEEE.

19. GENERAL CONTRACTOR SHALL SUBMIT SHOP DRAWINGS OR MANUFACTURES CATALOG INFORMATION OF ANY/ALL LIGHTING FIXTURES, SWITCHES AND ALL OTHER ELECTRICAL ITEMS FOR APPROVAL BY THE CONSTRUCTION MANAGER PRIOR TO INSTALLATION.

20. ANY CUTTING OR PATCHING DEEMED NECESSARY FOR ELECTRICAL WORK IS THE CONTRACTOR(S) RESPONSIBILITY AND SHALL BE INCLUDED IN THE COST FOR WORK AND PERFORMED TO THE SATISFACTION OF THE CONSTRUCTION MANAGER UPON FINAL ACCEPTANCE.

21. THE SUBCONTRACTOR SHALL LABEL ALL PANELS WITH ONLY TYPEWRITTEN DIRECTORIES.

22. DISCONNECT SWITCHES SHALL BE H.P. RATED HEAVY–DUTY, QUICK–MAKE AND QUICK–BREAK ENCLOSURES, AS REQUIRED BY EXPOSURE TYPE.

23. ALL CONNECTIONS SHALL BE MADE WITH A PROTECTIVE COATING OF AN ANTI–OXIDE COMPOUND SUCH AS "NOALOX" BY IDEAL INDUSTRIAL INC. COAT ALL WIRE SURFACES BEFORE CONNECTING. EXPOSED ALUMINUM & COPPER SURFACES, INCLUDING GROUND BARS, SHALL BE TREATED – NO SUBSTITUTIONS.

24. ALL EXTERIOR AND INTERIOR ABOVE GROUND CONDUIT SHALL BE RIGID GALVANIZED STEEL UNLESS SPECIFIED OTHERWISE. RACEWAYS: ALL CONDUITS SHALL BE SCHEDULE 40 EMT MEETING OR EXCEEDING NEMA TC2 – 1990 UNLESS SPECIFIED OTHERWISE. THE SUB–CONTRACTOR SHALL PLUG AND CAP EACH END OF SPARE AND EMPTY CONDUITS AND PROVIDE TWO SEPARATE PULL STRINGS – 200 LBS TEST POLYETHYLENE CORD. ALL CONDUIT BENDS SHALL BE A MINIMUM OF 3 FT. RADIUS. EMT CONDUITS WHEN SPECIFIED, SHALL MEET UL–6 FOR GALVANIZED STEEL. ALL FITTINGS SHALL BE SUITABLE FOR USE WITH THREADED RIGID CONDUIT. COAT ALL THREADS WITH 'BRITE ZINC' OR 'GOLD GALV'.

25. SUPPORT OF ALL ELECTRICAL WORK SHALL BE AS REQUIRED BY NEC.

26. CONNECTORS FOR POWER CONDUCTORS: SUB–CONTRACTOR SHALL USE PRESSURE TYPE INSULATED TWIST–ON CONNECTORS FOR NO. 10 AWG AND SMALLER. USE SOLDERLESS MECHANICAL TERMINAL LUGS FOR NO. 8 AWG AND LARGER.

27. THE SUB–CONTRACTOR SHALL PLACE TWO LENGTHS OF WARNING TAPE AT A DEPTH OF 12" BELOW GROUND AND DIRECTLY ABOVE ELECTRICAL SERVICE CONDUITS. CAUTIONS TAPE TO READ "CAUTION BURIED ELECTRIC".

28. WHEN DIRECTIONAL BORING IS REQUIRED, SUB–CONTRACTOR SHALL INSTALL A LOOSE TONING WIRE WITHIN INSTALLED CONDUIT TO ALLOW FOR IDENTIFICATION OF UNDERGROUND CONDUITS.

29. ALL BOLTS SHALL BE STAINLESS STEEL.

30. ALL MATERIALS AND EQUIPMENT SUPPLIED AND INSTALLED BY THE SUBCONTRACTOR SHOULD BE NEW AND UNUSED.

31. PER NEC 625.22 – THE USER INTERFACE (CHARGE POST) IS CONTROLLED BY THE ELECTRICAL EQUIPMENT (SUPERCHARGER CABINET) AND THE FOLLOWING PRECAUTIONS HAVE BEEN TAKEN TO ENSURE THE SAFETY OF CUSTOMERS AND THOSE AROUND THE EQUIPMENT. BEFORE ANY VOLTAGE OR CURRENT IS APPLIED TO THE CHARGE POST, THE CABINET MUST COMMUNICATE WITH THE TESLA VEHICLE. THERE IS A 'HANDSHAKE' BETWEEN THE CAR AND THE CABINET CONFIRMING THAT THE VEHICLE IS ACTUALLY A TESLA AND THAT THE VEHICLE CAN HANDLE THE SUPERCHARGING. VOLTAGE IS THEN APPLIED TO THE POWER SOCKETS IN THE CHARGE POST AND ONCE THE VOLTAGE READING FROM THE CAR IS VERIFIED AS THE SAME IN THE CHARGING CABINET, THEN CURRENT BEGINS TO FLOW. IF AT ANY POINT IN THIS PROCESS A FAULT IS DETECTED, THE CHARGING WILL STOP IMMEDIATELY, WITHIN A MATTER OF MILLISECONDS. DURING THE NORMAL CHARGING CYCLE, IF ANY FAULT OR IRREGULARITY IS DETECTED, THE CHARGING WILL AGAIN STOP WITHIN MILLISECONDS OF DETECTION. BEYOND THIS LOGIC PROTECTION, THERE IS PHYSICAL PROTECTION FROM OVER–CURRENT OR OVER–VOLTAGE WITHIN EACH OF THE CHARGERS. BEYOND THAT, FAST ACTING FUSES ALSO PROTECT THE VEHICLE OUTPUTS FROM OUTPUTTING TOO HIGH OF A CURRENT.

## REINFORCED CONCRETE NOTES:

1. DESIGN AND CONSTRUCTION OF ALL CONCRETE ELEMENTS SHALL CONFORM TO THE LATEST EDITIONS OF THE FOLLOWING APPLICABLE CODES: ACI 301 "SPECIFICATIONS FOR STRUCTURAL CONCRETE FOR BUILDINGS"; ACI 318, "BUILDING CODE REQUIREMENTS FOR REINFORCED CONCRETE".

2. DO NOT USE RETEMPERED CONCRETE, OR ADD WATER TO READY–MIX CONCRETE AT THE JOB SITE. MIX DESIGN SHALL BE APPROVED BY OWNER'S REPRESENTATIVE PRIOR TO PLACING CONCRETE.

3. ANY NEW CONCRETE NEEDED FOR THE CONSTRUCTION SHALL BE AIR–ENTRAINED AND SHALL HAVE 2500 PSI STRENGTH AT 28 DAYS (UNLESS OTHERWISE NOTED). ALL CONCRETE WORK SHALL BE DONE IN ACCORDANCE WITH ACI 318 CODE REQUIREMENTS.

4. MAXIMUM AGGREGATE SIZE SHALL BE 3/4".

5. THE FOLLOWING MATERIALS SHALL BE USED:

| | |
|---|---|
| PORTLAND CEMENT: | ASTM C 150, TYPE I |
| REINFORCEMENT: | ASTM A 615, GRADE 60 |
| NORMAL WEIGHT AGGREGATE: | ASTM C 33 |
| WATER: | DRINKABLE |
| ADMIXTURES: | NON–CHLORIDE CONTAINING |

6. REINFORCING DETAILS SHALL BE IN ACCORDANCE WITH "DETAILING MANUAL–2004 PUBLICATION SP–66" AND "BUILDING CODE REQUIREMENTS FOR REINFORCED CONCRETE", ACI–318–08.

7. REINFORCING STEEL SHALL CONFORM TO ASTM A 615, GRADE 60, DEFORMED UNLESS NOTED OTHERWISE. WELDED WIRE FABRIC SHALL CONFORM TO ASTM A 185 WELDED STEEL WIRE FABRIC UNLESS NOTED OTHERWISE. SPLICES SHALL BE CLASS "B"; ALL HOOKS SHALL BE STANDARD, UNO.

8. THE FOLLOWING MINIMUM CONCRETE COVER SHALL BE PROVIDED FOR REINFORCING STEEL UNLESS SHOWN OTHERWISE ON DRAWINGS:

| | | |
|---|---|---|
| CONCRETE CAST AGAINST EARTH: | 3 IN. | |
| CONCRETE EXPOSED TO EARTH OR WEATHER: | #6 AND LARGER | 2 IN. |
| | #5 AND SMALLER & WWF | 1–1/2 IN. |
| CONCRETE NOT EXPOSED TO EARTH OR WEATHER OR NOT CAST AGAINST THE GROUND: | SLAB AND WALL | 3/4 IN. |
| | BEAMS AND COLUMNS | 1–1/2 IN. |

9. A CHAMFER 3/4" SHALL BE PROVIDED AT ALL EXPOSED EDGES OF CONCRETE, IN ACCORDANCE WITH ACI 301 SECTION 4.2.4.

10. INSTALLATION OF CONCRETE ANCHOR, SHALL BE PER MANUFACTURERS WRITTEN RECOMMENDED PROCEDURE. THE ANCHOR BOLT, DOWEL OR ROD SHALL CONFORM TO MANUFACTURER'S RECOMMENDATION FOR EMBEDMENT DEPTH OR AS SHOWN ON THE DRAWINGS. NO REBAR SHALL BE CUT WITHOUT PRIOR ENGINEERING APPROVAL WHEN DRILLING HOLES IN CONCRETE.

11. CURING COMPOUNDS SHALL CONFORM TO ASTM C–309.

12. ADMIXTURES SHALL CONFORM TO THE APPROPRIATE ASTM STANDARD AS REFERENCED IN ACI–301.

13. DO NOT WELD OR TACKWELD REINFORCING STEEL.

14. ALL DOWELS, ANCHOR BOLTS, EMBEDDED STEEL, ELECTRICAL CONDUITS, PIPE SLEEVES, GROUNDS AND ALL OTHER EMBEDDED ITEMS AND FORMED DETAILS SHALL BE IN PLACE BEFORE START OF CONCRETE PLACEMENT.

15. LOCATE ADDITIONAL EXPANSION JOINTS REQUIRED TO FACILITATE CONSTRUCTION AS ACCEPTABLE TO ENGINEER. PLACE REINFORCEMENT CONTINUOUSLY THROUGH JOINT.

16. REINFORCEMENT SHALL BE COLD BENT WHENEVER BENDING IS REQUIRED.

17. PLACE CONCRETE IN A UNIFORM MANNER TO PREVENT THE FORMATION OF COLD JOINTS AND OTHER PLANES OF WEAKNESS. VIBRATE THE CONCRETE TO FULLY EMBED REINFORCING. DO NOT USE VIBRATORS TO TRANSPORT CONCRETE THROUGH CHUTES OR FORMWORK.

18. DO NOT PLACE CONCRETE IN WATER, ICE, OR ON FROZEN GROUND.

19. DO NOT ALLOW CONCRETE SUBBASE TO FREEZE DURING CONCRETE CURING AND SETTING PERIOD, OR FOR A MINIMUM OF 14 DAYS AFTER PLACEMENT.

20. MAINTAIN TEMPERATURE OF CAST IN PLACE CONCRETE BETWEEN 50 DEGREES AND 90 DEGREES FAHRENHEIT. FOR COLD–WEATHER AND HOT–WEATHER CONCRETE PLACEMENT, CONFORM TO APPLICABLE ACI CODES AND RECOMMENDATIONS. IN EITHER CASE, MATERIALS CONTAINING CHLORIDE, CALCIUM, SALTS, ETC. SHALL NOT BE USED. PROTECT FRESH CONCRETE FROM WEATHER FOR 7 DAYS MINIMUM.

21. UNLESS INDICATED OTHERWISE ON THE DRAWINGS, REINFORCEMENT SPLICES SHALL MEET CLASS B, TENSION LAP REQUIREMENTS IN ACCORDANCE WITH ALL PROVISIONS OF ACI 318 LATEST EDITION, UNLESS NOTED OTHERWISE.

22. PROVIDE ACCESSORIES NECESSARY TO PROPERLY SUPPORT REINFORCING.

## TRAFFIC MANAGEMENT NOTES:

1. ALL TEMPORARY CONTROL WORK SHALL CONFORM TO THE LATEST EDITION OF THE "MANUAL ON UNIFORM TRAFFIC CONTROL DEVICES" (MUTCD) AND ALL REVISIONS, UNLESS SUPERCEDED BY THESE PLANS.

2. ALL SIGN LEGENDS, BORDERS, AND MOUNTING SHALL BE IN ACCORDANCE WITH THE MUTCD.

3. TEMPORARY CONSTRUCTION SIGNING AND ALL OTHER TRAFFIC CONTROL DEVICES SHALL BE IN PLACE PRIOR TO THE START OF ANY WORK.

4. TEMPORARY CONSTRUCTION SIGNING, BARRICADES, AND ALL OTHER NECESSARY WORK ZONE TRAFFIC CONTROL DEVICES SHALL BE REMOVED FROM THE HIGHWAY OR COVERED WHEN THEY ARE NOT REQUIRED FOR CONTROL OF TRAFFIC.

5. SIGNS AND SIGN SUPPORTS LOCATED ON OR NEAR THE TRAVELED WAY, CHANNELIZING DEVICES, BARRIERS, AND CRASH ATTENUATORS MUST PASS THE CRITERIA SET FORTH IN NCHRP REPORT 350, "RECOMMENDED PROCEDURES FOR THE SAFETY PERFORMANCE EVALUATION OF HIGHWAY FEATURES" AND/OR "MANUAL FOR ASSESSING SAFETY HARDWARE" (MASH).

6. CONTRACTORS SHALL NOTIFY THE OWNER AND ALL TENANTS OF THIS PROPERTY AT LEAST 24 HOURS IN ADVANCE OF THE START OF ANY WORK THAT WILL REQUIRE THE TEMPORARY CLOSURE OF ACCESS, SUCH AS CONDUIT INSTALLATION, EXISTING PAVEMENT EXCAVATION, TEMPORARY DRIVEWAY PAVEMENT PLACEMENT, AND SIMILAR OPERATIONS.

7. THE FIRST FIVE PLASTIC DRUMS OF A TAPER SHALL BE MOUNTED WITH TYPE A LIGHTS.

8. MAXIMUM SPACING OF TRAFFIC DEVICES IN A TAPER (DRUMS OR CONES) IS EQUAL IN FEET TO THE SPEED LIMIT IN MPH.

9. MINIMUM LANE WIDTH IS TO BE 11 FEET (3.3m) UNLESS OTHERWISE SHOWN. MINIMUM LANE WIDTH TO BE MEASURED FROM THE EDGE OF DRUMS OR MEDIAN BARRIER.

10. EXISTING PEDESTRIAN ACCESS SHALL BE MAINTAINED AT ALL TIMES THROUGH A COMBINATION OF PEDESTRIAN DETOURS OR PROTECTED SAFE ROUTES. ALL PEDESTRIAN ROUTES SHALL MEET APPLICABLE ACCESSIBILITY REQUIREMENTS.

11. THE CONTRACTOR SHALL BE RESPONSIBLE FOR MAINTENANCE AND PROTECTION OF TRAFFIC THROUGHOUT CONSTRUCTION AT THIS LOCATION. THE CONTRACTOR SHALL INSTALL TEMPORARY TRAFFIC SIGNS, DRUMS, CONES, OR OTHER TRAFFIC CONTROL DEVICES TO DIRECT VEHICLES AND PEDESTRIANS AROUND THE WORK ZONE.

## HORIZONTAL DIRECT DRILLING NOTES:

1. THE WORK SPECIFIED IN THIS SECTION CONSISTS OF FURNISHING AND INSTALLING UNDERGROUND UTILITIES USING THE DIRECTIONAL BORING (HORIZONTAL DIRECTIONAL DRILLING, HDD) METHOD OF INSTALLATION, ALSO COMMONLY REFERRED TO AS GUIDED HORIZONTAL BORING. THIS WORK SHALL INCLUDE ALL SERVICES, EQUIPMENT, MATERIALS, AND LABOR FOR THE COMPLETE AND PROPER INSTALLATION, TESTING, RESTORATION OF UNDERGROUND UTILITIES AND ENVIRONMENTAL PROTECTION AND RESTORATION.

2. WORK PLAN: PRIOR TO BEGINNING WORK, THE CONTRACTOR MUST SUBMIT TO THE ENGINEER A GENERAL WORK PLAN OUTLINING THE PROCEDURE AND SCHEDULE TO BE USED TO EXECUTE THE PROJECT. PLAN SHOULD DOCUMENT THE THOUGHTFUL PLANNING REQUIRED TO SUCCESSFULLY COMPLETE THE PROJECT.

3. ENVIRONMENTAL PROTECTION: CONTRACTOR SHALL PLACE SILT FENCE BETWEEN ALL BORING OPERATIONS AND ANY DRAINAGE, WETLAND, WATERWAY OR OTHER AREA DESIGNATED FOR SUCH PROTECTION BY CONTRACT DOCUMENTS, STATE, FEDERAL AND LOCAL REGULATIONS. ADDITIONAL ENVIRONMENTAL PROTECTION NECESSARY TO CONTAIN ANY HYDRAULIC OR BORING FLUID SPILLS SHALL BE PUT IN PLACE, INCLUDING BERMS, LINERS, TURBIDITY CURTAINS AND OTHER MEASURES. CONTRACTOR SHALL ADHERE TO ALL APPLICABLE ENVIRONMENTAL REGULATIONS. FUEL OR OIL MAY NOT BE STORED IN BULK CONTAINERS WITHIN 200' OF ANY WATER–BODY OR WET–LAND.

4. UTILITY LOCATES: CONTRACTOR SHALL NOTIFY ALL COMPANIES WITH UNDERGROUND UTILITIES IN THE WORK AREA VIA THE STATE OR LOCAL 'ONE–CALL' TO OBTAIN UTILITY LOCATES. ONCE THE UTILITIES HAVE BEEN LOCATED CONTRACTOR SHALL PHYSICALLY IDENTIFY THE EXACT LOCATION OF THE UTILITIES BY VACUUM OR HAND EXCAVATION, WHEN POSSIBLE, IN ORDER TO DETERMINE THE ACTUAL LOCATION AND PATH OF ANY UNDERGROUND UTILITIES WHICH MIGHT BE WITHIN 20 FEET OF THE BORE PATH. CONTRACTOR SHALL NOT COMMENCE BORING OPERATIONS UNTIL THE LOCATION OF ALL UNDERGROUND UTILITIES WITHIN THE WORK AREA HAVE BEEN VERIFIED.

5. SAFETY: CONTRACTOR SHALL ADHERE TO ALL APPLICABLE STATE, FEDERAL AND LOCAL SAFETY REGULATIONS AND ALL OPERATIONS SHALL BE CONDUCTED IN A SAFE MANNER. SAFETY MEETINGS SHALL BE CONDUCTED AT LEAST WEEKLY WITH A WRITTEN RECORD OF ATTENDANCE AND TOPIC SUBMITTED TO ENGINEER.

6. SITE RESTORATION: FOLLOWING BORING OPERATIONS, CONTRACTOR WILL DE–MOBILIZE EQUIPMENT AND RESTORE THE WORK–SITE TO ORIGINAL CONDITION. ALL EXCAVATIONS WILL BE BACKFILLED AND COMPACTED TO 95% OF ORIGINAL DENSITY. LANDSCAPING WILL BE RESTORED TO ORIGINAL.

7. RECORD KEEPING: CONTRACTOR SHALL MAINTAIN A DAILY PROJECT LOG OF BORING OPERATIONS AND A GUIDANCE SYSTEM LOG WITH A COPY GIVEN TO ENGINEER AT COMPLETION OF PROJECT. AS–BUILT DRAWINGS SHALL BE CERTIFIED AS TO ACCURACY BY CONTRACTOR.


TESLA

3500 DEER CREEK ROAD
PALO ALTO, CA 94304
(650) 681-5000

Dewberry®

Dewberry Engineers Inc.
2835 BRANDYWINE ROAD
SUITE 100
ATLANTA, GA 30341-4015
PHONE: 678.530.002
GA LIC. NO. PEF002398 (6/30/2024)


GEORGIA REGISTERED No. PE045736 PROFESSIONAL ENGINEER MATTHEW C. SELKIRK
05/26/23

| | |
|---|---|
| DRAWN BY: | WG |
| CHECKED BY: | DSW |
| APPROVED BY: | MCS |
| PROJECT #: | 50123704 |
| JOB #: | 50163344 |

SUBMITTALS

| REV. | DATE | DESCRIPTION |
|---|---|---|
| | | |
| | | |
| | | |
| | | |
| | | |
| | | |
| | | |
| 0 | 05/26/23 | ISSUED FOR S&S |
| B | 05/17/23 | ISSUED FOR 90% REVIEW |
| A | 05/09/23 | ISSUED FOR 90% REVIEW |

SITE NAME:
DULUTH, GA – PEACHTREE INDUSTRIAL BLVD
(TRT ID: 27314)

SITE ADDRESS:
2220 PEACHTREE INDUSTRIAL BLVD
DULUTH, GA 30097

SHEET TITLE

GENERAL NOTES II

SHEET NUMBER

GN–2

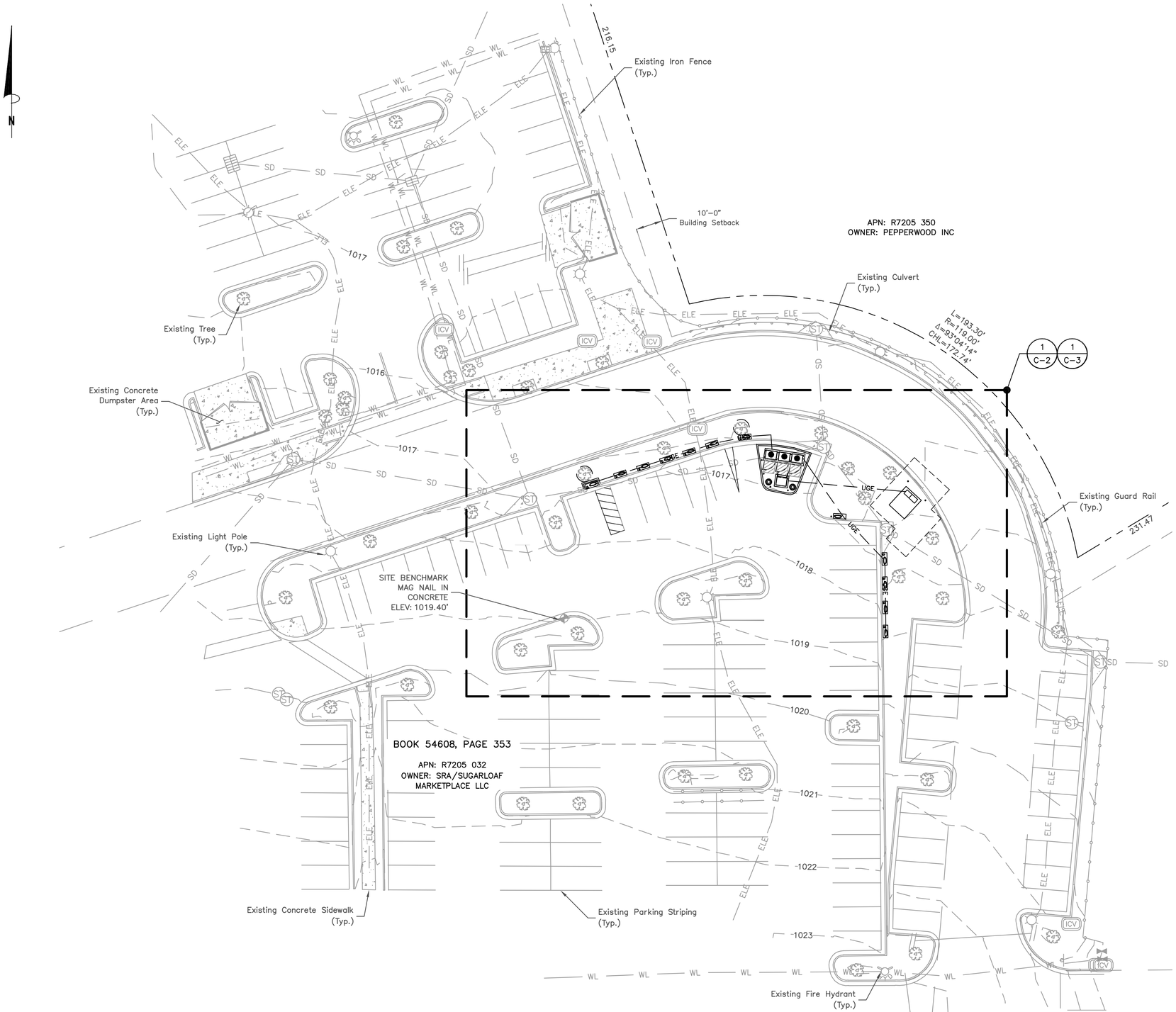


## DETAILED SITE PLAN (1)

SCALE: 1"=40' FOR 11"x17"
1"=20' FOR 22"x34"

## LEGEND

- DECIDUOUS TREE WITH DRIPLINE
- ELECTRIC BOX
- FENCE GATE
- FIRE HYDRANT
- IRRIGATION CONTROL VALVE
- LIGHT POLE
- SIGN
- SITE BENCHMARK
- STORM INLET (RECTANGLE)
- STORM MANHOLE
- UNKNOWN TERMINUS
- WATER VALVE
- ELE — ELECTRIC LINE (UNDERGROUND)
- GUARD RAIL
- HAND RAIL
- IRON FENCE
- SD — STORM LINE (UNDERGROUND)
- UNKNOWN LINE (UNDERGROUND)
- WL — WATER LINE (UNDERGROUND)
- CONCRETE AREA

## TESLA PROVIDED EQUIPMENT LIST

| EQUIPMENT | QTY |
|---|---|
| GRAY SIGN POST OFFSET EV FLEX REBOUNDING BOLLARD | 10 |
| GRAY 4" STANDARD DEEP MOUNT CRASHCORE | 5 |
| V3 CABINET (4 POST) | 3 |
| CHARGE POST PRECAST | 12 |
| 1600A LINCOLN SWITCHGEAR | 1 |
| DISABLED ACCESS, USE LAST SIGN | 1 |
| VAN ACCESSIBLE SIGN | 1 |
| ADA HANDLE | 1 |
| STAR CENTER KIT | 1 |
| TRASH BLACK | 1 |
| RECYCLE BLUE | 1 |

NOTES:

1. SITE PLAN BASED ON ENGINEERING DESIGN SURVEY: A PORTION OF LAND LOT 205 OF THE 7TH DISTRICT, RECORDED SEPTEMBER 21. 2016, BOOK 54608, PAGE 353, CITY OF DULUTH, GWINNETT COUNTY, GA BY CLARK LAND SURVEYING, INC. DATED 04/26/2023.
2. UTILITY CONNECTION TO BE MADE UNDER GEORGIA POWER UTILITIES STANDARDS, CONFIRM FINAL DESIGN PRIOR TO CONSTRUCTION, GEORGIA POWER WORK ORDER TBD.
3. EXISTING UNDERGROUND UTILITIES LOCATED WITHIN AREA OF PROPOSED TRENCH & EQUIPMENT SITE AREA. HAND DIG AND RELOCATE AS REQUIRED.
4. EXISTING STORM DRAIN INLETS TO BE COVERED WITH SILT BAG DURING CONSTRUCTION.
5. CONTRACTOR TO CONFIRM ADA/ACCESSIBLE STRIPING & ASSOCIATED STALLS HAVE <2% GRADE IN ALL DIRECTIONS.
6. RAISED ISLAND TO BE FINISHED WITH ROCK OR GRAVEL GROUND COVER. NO MULCH PERMITTED


TESLA
3500 DEER CREEK ROAD
PALO ALTO, CA 94304
(650) 681-5000

Dewberry®
Dewberry Engineers Inc.
2835 BRANDYWINE ROAD
SUITE 100
ATLANTA, GA 30341-4015
PHONE: 678.530.002
GA LIC. NO. PEF002398 (6/30/2024)


GEORGIA REGISTERED No. PE045736 PROFESSIONAL ENGINEER MATTHEW C. SELKIRK 05/26/23

| | |
|---|---|
| DRAWN BY: | WG |
| CHECKED BY: | DSW |
| APPROVED BY: | MCS |
| PROJECT #: | 50123704 |
| JOB #: | 50163344 |

SUBMITTALS

| REV. | DATE | DESCRIPTION |
|---|---|---|
| | | |
| | | |
| | | |
| | | |
| | | |
| | | |
| | | |
| 0 | 05/26/23 | ISSUED FOR S&S |
| B | 05/17/23 | ISSUED FOR 90% REVIEW |
| A | 05/09/23 | ISSUED FOR 90% REVIEW |

SITE NAME:
DULUTH, GA – PEACHTREE INDUSTRIAL BLVD
(TRT ID: 27314)

SITE ADDRESS:
2220 PEACHTREE INDUSTRIAL BLVD
DULUTH, GA 30097

SHEET TITLE
DETAILED SITE PLAN

SHEET NUMBER
C-1

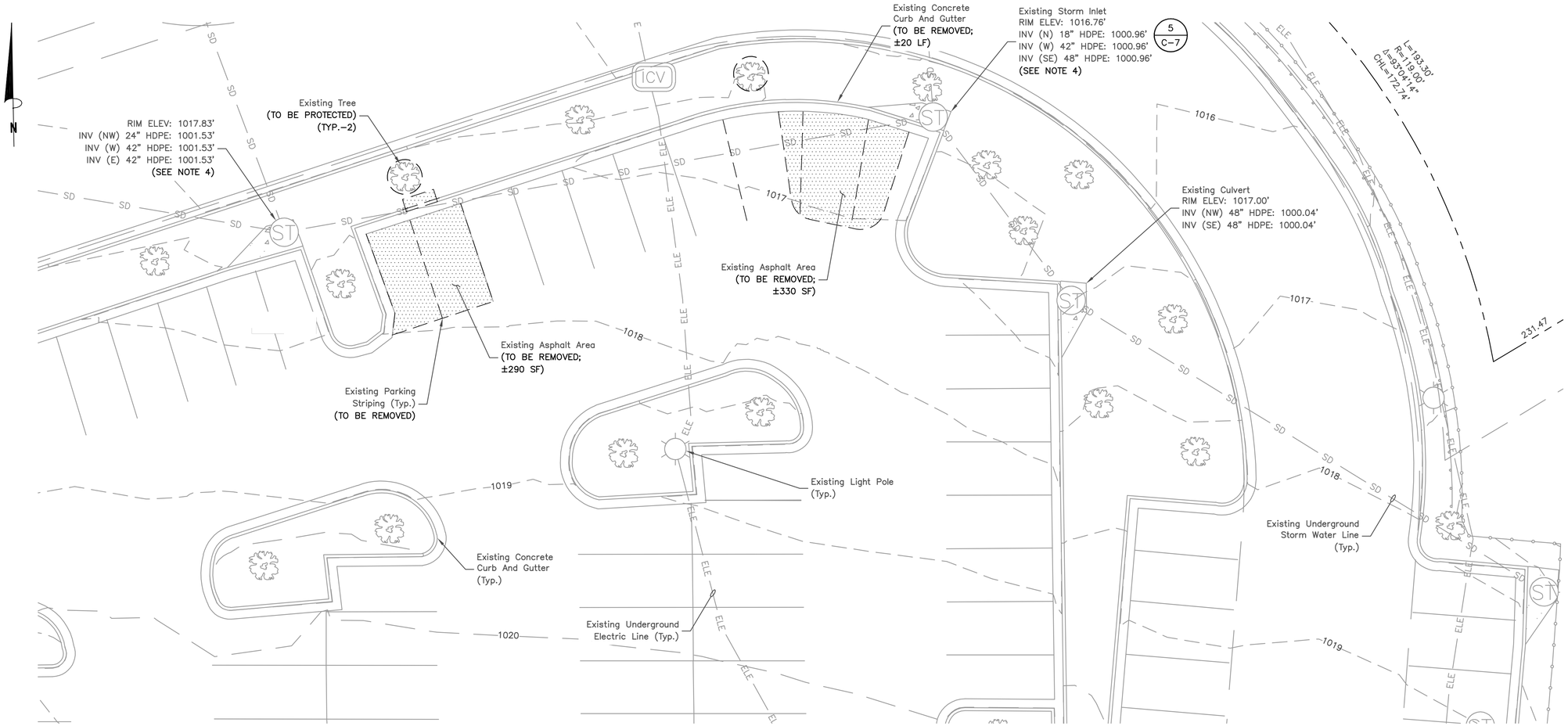


## EXISTING CONDITIONS PLAN (1)

SCALE: 1"=20' FOR 11"x17"
1"=10' FOR 22"x34"

0' 10' 20'

NOTES:

1. SITE PLAN BASED ON ENGINEERING DESIGN SURVEY: A PORTION OF LAND LOT 205 OF THE 7TH DISTRICT, RECORDED SEPTEMBER 21. 2016, BOOK 54608, PAGE 353, CITY OF DULUTH, GWINNETT COUNTY, GA BY CLARK LAND SURVEYING, INC. DATED 04/26/2023.
2. UTILITY CONNECTION TO BE MADE UNDER GEORGIA POWER UTILITIES STANDARDS, CONFIRM FINAL DESIGN PRIOR TO CONSTRUCTION, GEORGIA POWER WORK ORDER TBD.
3. EXISTING UNDERGROUND UTILITIES LOCATED WITHIN AREA OF PROPOSED TRENCH & EQUIPMENT SITE AREA. HAND DIG AND RELOCATE AS REQUIRED.
4. EXISTING STORM DRAIN INLETS TO BE COVERED WITH SILT BAG DURING CONSTRUCTION.
5. CONTRACTOR TO CONFIRM ADA/ACCESSIBLE STRIPING & ASSOCIATED STALLS HAVE <2% GRADE IN ALL DIRECTIONS.
6. RAISED ISLAND TO BE FINISHED WITH ROCK OR GRAVEL GROUND COVER. NO MULCH PERMITTED


TESLA
3500 DEER CREEK ROAD
PALO ALTO, CA 94304
(650) 681-5000

Dewberry®
Dewberry Engineers Inc.
2835 BRANDYWINE ROAD
SUITE 100
ATLANTA, GA 30341-4015
PHONE: 678.530.002
GA LIC. NO. PEF002398 (6/30/2024)


GEORGIA REGISTERED PROFESSIONAL ENGINEER No. PE045736 MATTHEW C. SELKIRK
05/26/23

| | |
|---|---|
| DRAWN BY: | WG |
| CHECKED BY: | DSW |
| APPROVED BY: | MCS |
| PROJECT #: | 50123704 |
| JOB #: | 50163344 |

SUBMITTALS

| REV. | DATE | DESCRIPTION |
|---|---|---|
| | | |
| | | |
| | | |
| | | |
| | | |
| | | |
| | | |
| 0 | 05/26/23 | ISSUED FOR S&S |
| B | 05/17/23 | ISSUED FOR 90% REVIEW |
| A | 05/09/23 | ISSUED FOR 90% REVIEW |

SITE NAME:
DULUTH, GA – PEACHTREE INDUSTRIAL BLVD
(TRT ID: 27314)

SITE ADDRESS:
2220 PEACHTREE INDUSTRIAL BLVD
DULUTH, GA 30097

SHEET TITLE
EXISTING CONDITIONS PLAN

SHEET NUMBER
C–2

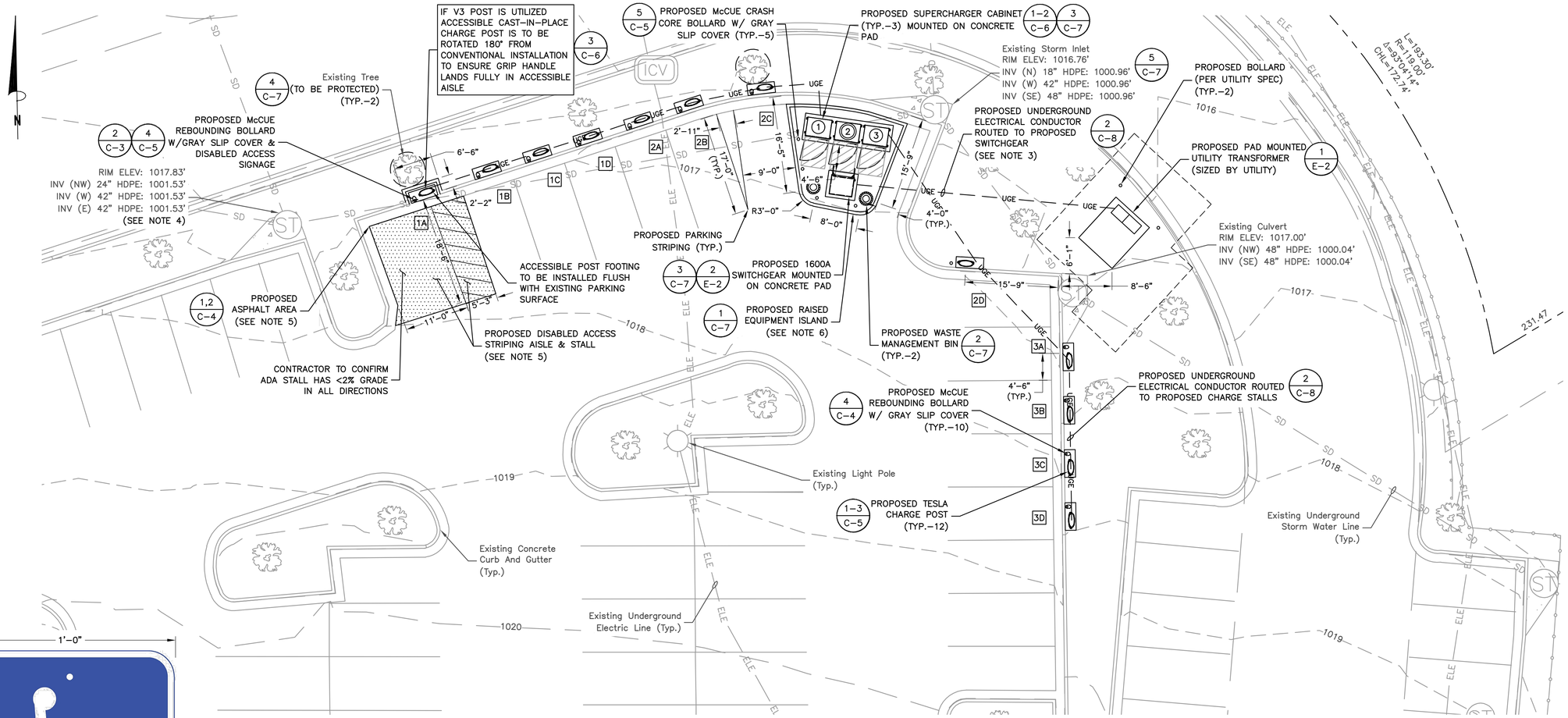


## EQUIPMENT/PARKING PLAN (1)

SCALE: 1"=20' FOR 11"x17"
1"=10' FOR 22"x34"

0' 10' 20'

## DISABLED ACCESS SIGN (2)

SCALE: N.T.S.

| LEGEND | |
|---|---|
| # | TESLA 'STAR-POINT' SUPERCHARGER # |
| # | TESLA 'STAR-CENTER' SUPERCHARGER # |
| 1A | TESLA CHARGE POST |

| PARKING STALL SCHEDULE | |
|---|---|
| DESCRIPTION | QUANTITY |
| EXISTING STALLS (TO BE MODIFIED) | 15 |
| PROPOSED TESLA STALLS | 12 |
| NET PARKING STALL CHANGE | -3 |

NOTES:

1. SITE PLAN BASED ON ENGINEERING DESIGN SURVEY: A PORTION OF LAND LOT 205 OF THE 7TH DISTRICT, RECORDED SEPTEMBER 21. 2016, BOOK 54608, PAGE 353, CITY OF DULUTH, GWINNETT COUNTY, GA BY CLARK LAND SURVEYING, INC. DATED 04/26/2023.
2. UTILITY CONNECTION TO BE MADE UNDER GEORGIA POWER UTILITIES STANDARDS, CONFIRM FINAL DESIGN PRIOR TO CONSTRUCTION, GEORGIA POWER WORK ORDER TBD.
3. EXISTING UNDERGROUND UTILITIES LOCATED WITHIN AREA OF PROPOSED TRENCH & EQUIPMENT SITE AREA. HAND DIG AND RELOCATE AS REQUIRED.
4. EXISTING STORM DRAIN INLETS TO BE COVERED WITH SILT BAG DURING CONSTRUCTION.
5. CONTRACTOR TO CONFIRM ADA/ACCESSIBLE STRIPING & ASSOCIATED STALLS HAVE <2% GRADE IN ALL DIRECTIONS.
6. RAISED ISLAND TO BE FINISHED WITH ROCK OR GRAVEL GROUND COVER. NO MULCH PERMITTED


TESLA
3500 DEER CREEK ROAD
PALO ALTO, CA 94304
(650) 681-5000

Dewberry®
Dewberry Engineers Inc.
2835 BRANDYWINE ROAD
SUITE 100
ATLANTA, GA 30341-4015
PHONE: 678.530.002
GA LIC. NO. PEF002398 (6/30/2024)


GEORGIA REGISTERED No. PE045736 PROFESSIONAL ENGINEER MATTHEW C. SELKIRK 05/26/23

| | |
|---|---|
| DRAWN BY: | WG |
| CHECKED BY: | DSW |
| APPROVED BY: | MCS |
| PROJECT #: | 50123704 |
| JOB #: | 50163344 |

SUBMITTALS

| REV. | DATE | DESCRIPTION |
|---|---|---|
| | | |
| | | |
| | | |
| | | |
| | | |
| | | |
| | | |
| | | |
| 0 | 05/26/23 | ISSUED FOR S&S |
| B | 05/17/23 | ISSUED FOR 90% REVIEW |
| A | 05/09/23 | ISSUED FOR 90% REVIEW |

SITE NAME:
DULUTH, GA – PEACHTREE INDUSTRIAL BLVD
(TRT ID: 27314)

SITE ADDRESS:
2220 PEACHTREE INDUSTRIAL BLVD
DULUTH, GA 30097

SHEET TITLE
EQUIPMENT/PARKING PLAN

SHEET NUMBER
C-3

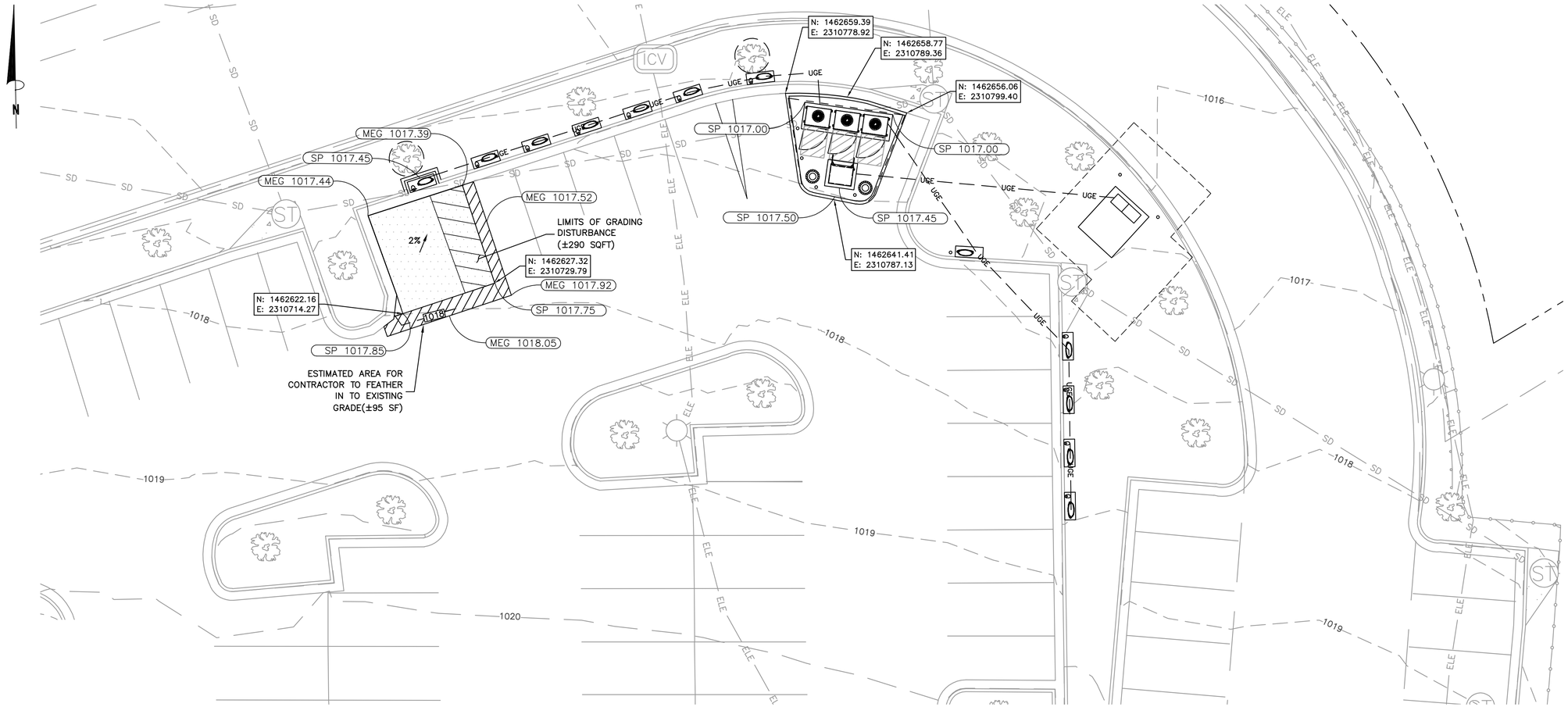


## GRADING PLAN

SCALE: 1"=20' FOR 11"x17"
1"=10' FOR 22"x34"

1

0' 10' 20'

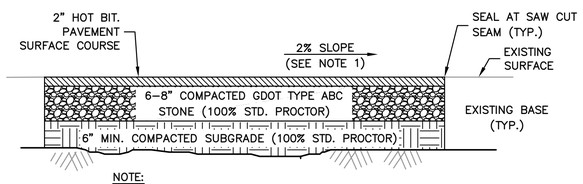


NOTE:

1. MAINTAIN EXISTING DRAINAGE PATTERNS. SLOPE TOWARD EXISTING STORM DRAIN.

## ASPHALT PAVEMENT DETAIL

SCALE: N.T.S.

2

NOTES:

1. SITE PLAN BASED ON ENGINEERING DESIGN SURVEY: A PORTION OF LAND LOT 205 OF THE 7TH DISTRICT, RECORDED SEPTEMBER 21. 2016, BOOK 54608, PAGE 353, CITY OF DULUTH, GWINNETT COUNTY, GA BY CLARK LAND SURVEYING, INC. DATED 04/26/2023.
2. UTILITY CONNECTION TO BE MADE UNDER GEORGIA POWER UTILITIES STANDARDS, CONFIRM FINAL DESIGN PRIOR TO CONSTRUCTION, GEORGIA POWER WORK ORDER TBD.
3. EXISTING UNDERGROUND UTILITIES LOCATED WITHIN AREA OF PROPOSED TRENCH & EQUIPMENT SITE AREA. HAND DIG AND RELOCATE AS REQUIRED.
4. EXISTING STORM DRAIN INLETS TO BE COVERED WITH SILT BAG DURING CONSTRUCTION.
5. CONTRACTOR TO CONFIRM ADA/ACCESSIBLE STRIPING & ASSOCIATED STALLS HAVE <2% GRADE IN ALL DIRECTIONS.
6. RAISED ISLAND TO BE FINISHED WITH ROCK OR GRAVEL GROUND COVER. NO MULCH PERMITTED


TESLA
3500 DEER CREEK ROAD
PALO ALTO, CA 94304
(650) 681-5000

Dewberry®
Dewberry Engineers Inc.
2835 BRANDYWINE ROAD
SUITE 100
ATLANTA, GA 30341-4015
PHONE: 678.530.002
GA LIC. NO. PEF002398 (6/30/2024)


GEORGIA REGISTERED No. PE045736 PROFESSIONAL ENGINEER MATTHEW C. SELKIRK
05/26/23

| | |
|---|---|
| DRAWN BY: | WG |
| CHECKED BY: | DSW |
| APPROVED BY: | MCS |
| PROJECT #: | 50123704 |
| JOB #: | 50163344 |

SUBMITTALS

| REV. | DATE | DESCRIPTION |
|---|---|---|
| | | |
| | | |
| | | |
| | | |
| | | |
| | | |
| | | |
| 0 | 05/26/23 | ISSUED FOR S&S |
| B | 05/17/23 | ISSUED FOR 90% REVIEW |
| A | 05/09/23 | ISSUED FOR 90% REVIEW |

SITE NAME:
DULUTH, GA – PEACHTREE INDUSTRIAL BLVD
(TRT ID: 27314)

SITE ADDRESS:
2220 PEACHTREE INDUSTRIAL BLVD
DULUTH, GA 30097

SHEET TITLE
GRADING PLAN

SHEET NUMBER
C–4

SUPERCHARGER PEDESTAL INSTALLATION NOTE:

WHEN INSTALLED BEHIND CURB, THE TOP OF THE PEDESTAL SHOULD BE FLUSH WITH THE CURB. WHEN INSTALLED IN A PAVEMENT AREA OR BEHIND THE EDGE OF PAVEMENT, THE TOP OF THE PEDESTAL SHOULD BE FLUSH WITH THE PAVEMENT.

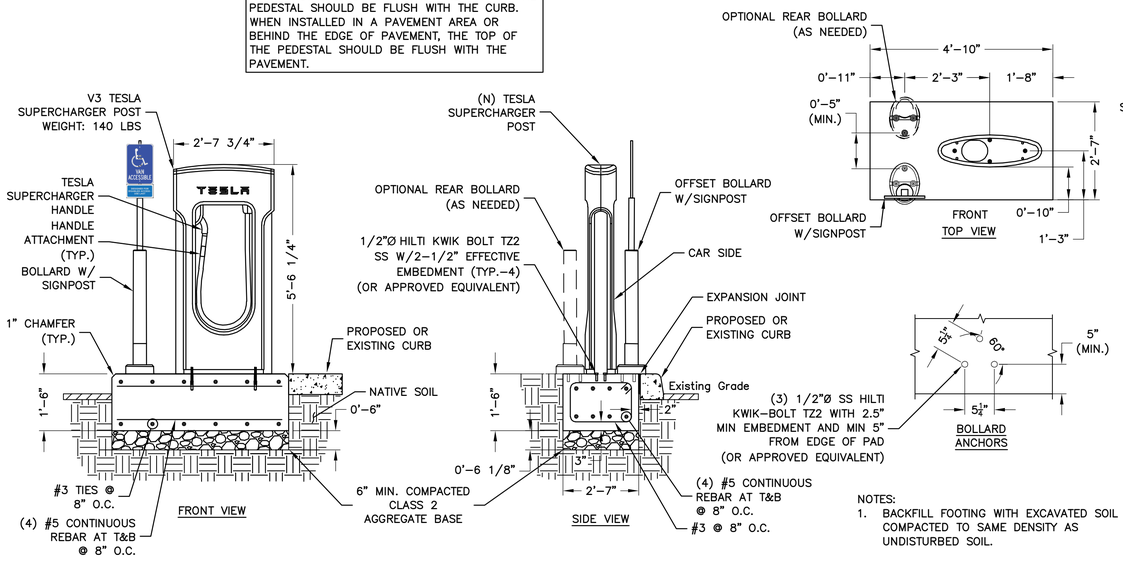


## V3 SUPERCHARGER POST CAST-IN-PLACE FOUNDATION DETAIL (1)

SCALE: N.T.S.

NOTES:

1. BACKFILL FOOTING WITH EXCAVATED SOIL COMPACTED TO SAME DENSITY AS UNDISTURBED SOIL.
2. CONTRACTOR TO PROVIDE A MINIMUM OF 6" OF COMPACTED CRUSHED STONE FOR CAPILLARY BREAK AND CONSTRUCTION CONTROL UNDER ALL CONCRETE SLABS.
3. CONTRACTOR SHALL IDENTIFY POOR DRAINING SOILS AND PROVIDE ADDITIONAL COMPACTED, WELL GRADED COURSE-GRAINED SOIL BACKFILL TO FROST DEPTH. CONTRACTOR TO NOTIFY TESLA CM AND ENGINEER.

SUPERCHARGER PEDESTAL INSTALLATION NOTE:

WHEN INSTALLED BEHIND CURB, THE TOP OF THE PEDESTAL SHOULD BE FLUSH WITH THE CURB. WHEN INSTALLED IN A PAVEMENT AREA OR BEHIND THE EDGE OF PAVEMENT, THE TOP OF THE PEDESTAL SHOULD BE FLUSH WITH THE PAVEMENT.

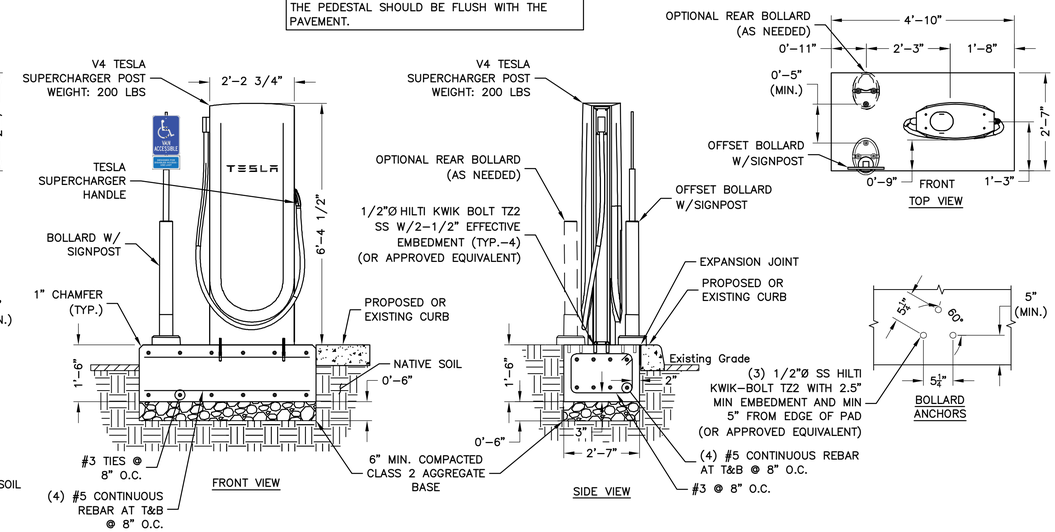


## V4 SUPERCHARGER POST CAST-IN-PLACE FOUNDATION DETAIL (2)

SCALE: N.T.S.

PRE-CAST PEDESTAL INSTALLATION NOTE:

PRE-CAST TESLA SUPERCHARGER PEDESTAL MAY ONLY BE USED IN STALL 1A IF V4 POST IS UTILIZED AS V3 POST AND BOLLARD ORIENTATION FOR REMAINING STALLS REQUIRES CAST-IN-PLACE FOOTING FOR PROPER ACCESSIBLE INSTALLATION.

SUPERCHARGER PEDESTAL INSTALLATION NOTE:

WHEN INSTALLED BEHIND CURB, THE TOP OF THE PEDESTAL SHOULD BE FLUSH WITH THE CURB. WHEN INSTALLED IN A PAVEMENT AREA OR BEHIND THE EDGE OF PAVEMENT, THE TOP OF THE PEDESTAL SHOULD BE FLUSH WITH THE PAVEMENT.

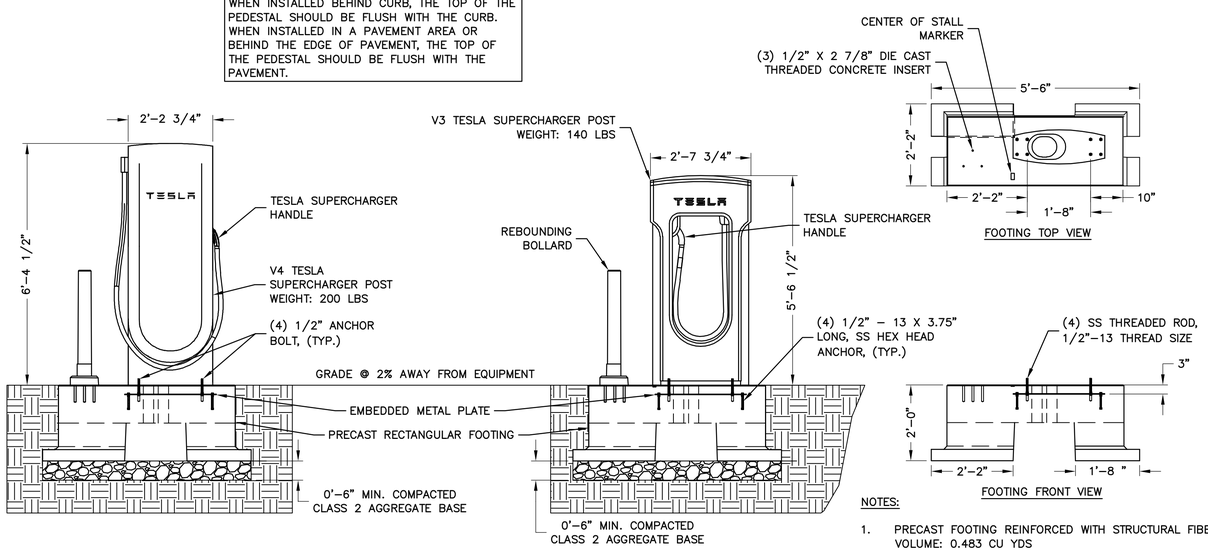


## TESLA SUPERCHARGER POST PRECAST FOUNDATION DETAIL (3)

SCALE: N.T.S.

NOTES:

1. PRECAST FOOTING REINFORCED WITH STRUCTURAL FIBER
   VOLUME: 0.483 CU YDS
   WEIGHT: 1,990 LBS
   SEE CUTSHEETS FOR ADDITIONAL INFORMATION
2. S501.1333 SUPERCHARGER POST CENTER ON CENTER PRECAST FOOTING DETAIL RA
   WIND RATING (WITHOUT SIGN) = 134 MPH
   WIND RATING (WITH SIGN) = 120 MPH

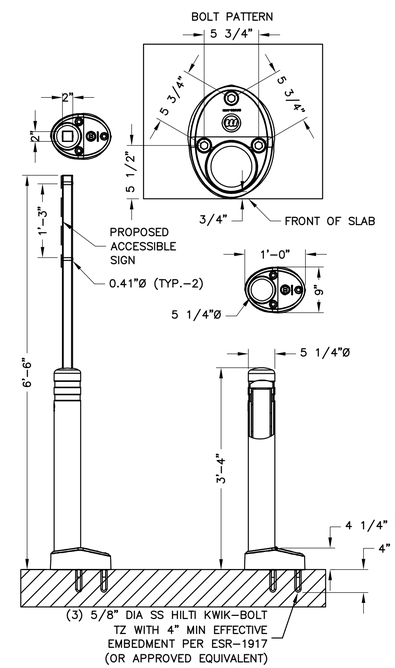


## McCUE REBOUNDING BOLLARD & SIGN (4)

SCALE: N.T.S.

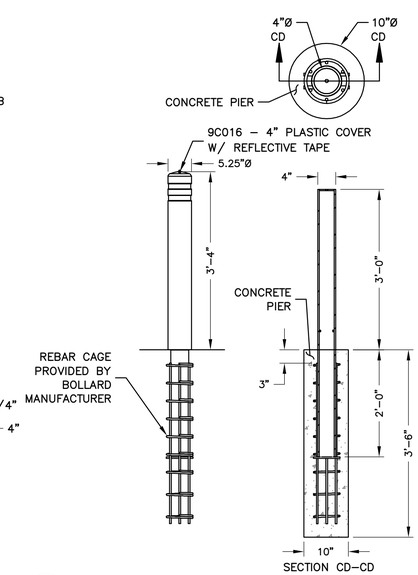


## McCUE CRASH CORE BOLLARD DETAIL (5)

SCALE: N.T.S.


TESLA
3500 DEER CREEK ROAD
PALO ALTO, CA 94304
(650) 681-5000

Dewberry®
Dewberry Engineers Inc.
2835 BRANDYWINE ROAD
SUITE 100
ATLANTA, GA 30341-4015
PHONE: 678.530.002
GA LIC. NO. PEF002398 (6/30/2024)


GEORGIA REGISTERED No. PE045736 PROFESSIONAL ENGINEER MATTHEW C. SELKIRK 05/26/23

| | |
|---|---|
| DRAWN BY: | WG |
| CHECKED BY: | DSW |
| APPROVED BY: | MCS |
| PROJECT #: | 50123704 |
| JOB #: | 50163344 |

SUBMITTALS

| REV. | DATE | DESCRIPTION |
|---|---|---|
| | | |
| | | |
| | | |
| | | |
| | | |
| | | |
| | | |
| 0 | 05/26/23 | ISSUED FOR S&S |
| B | 05/17/23 | ISSUED FOR 90% REVIEW |
| A | 05/09/23 | ISSUED FOR 90% REVIEW |

SITE NAME:
DULUTH, GA - PEACHTREE INDUSTRIAL BLVD
(TRT ID: 27314)

SITE ADDRESS:
2220 PEACHTREE INDUSTRIAL BLVD
DULUTH, GA 30097

SHEET TITLE
CONSTRUCTION DETAILS I

SHEET NUMBER
C-5

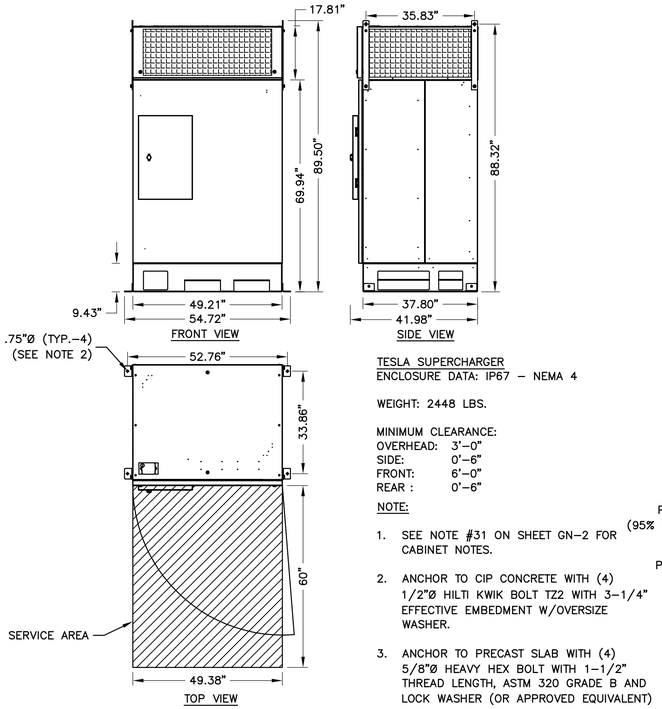


TESLA SUPERCHARGER
ENCLOSURE DATA: IP67 – NEMA 4

WEIGHT: 2448 LBS.

MINIMUM CLEARANCE:
OVERHEAD: 3'–0"
SIDE: 0'–6"
FRONT: 6'–0"
REAR : 0'–6"

NOTE:

1. SEE NOTE #31 ON SHEET GN–2 FOR CABINET NOTES.
2. ANCHOR TO CIP CONCRETE WITH (4) 1/2"Ø HILTI KWIK BOLT TZ2 WITH 3–1/4" EFFECTIVE EMBEDMENT W/OVERSIZE WASHER.
3. ANCHOR TO PRECAST SLAB WITH (4) 5/8"Ø HEAVY HEX BOLT WITH 1–1/2" THREAD LENGTH, ASTM 320 GRADE B AND LOCK WASHER (OR APPROVED EQUIVALENT)

## TESLA SUPERCHARGER CABINET DETAIL (1)

SCALE: N.T.S.

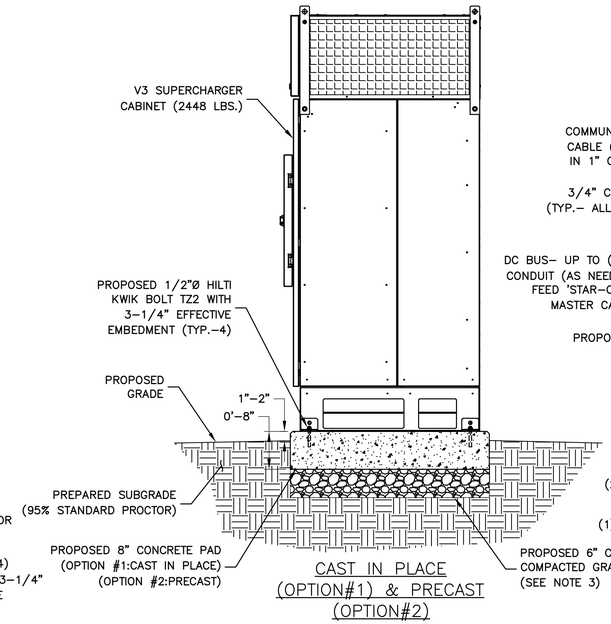


CAST IN PLACE
(OPTION#1) & PRECAST
(OPTION#2)

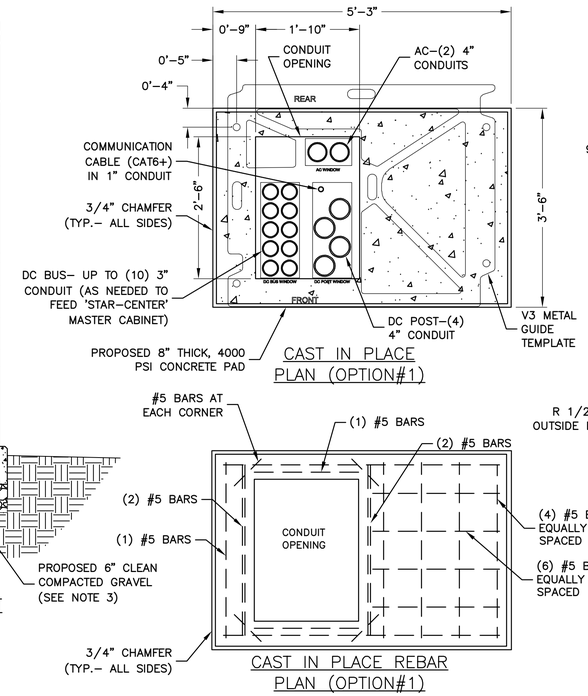


CAST IN PLACE
PLAN (OPTION#1)

CAST IN PLACE REBAR
PLAN (OPTION#1)

## V3 CABINET FOUNDATION PLAN (2)

SCALE: 3/8"=1' FOR 11"x17"
3/4"=1' FOR 22"x34"

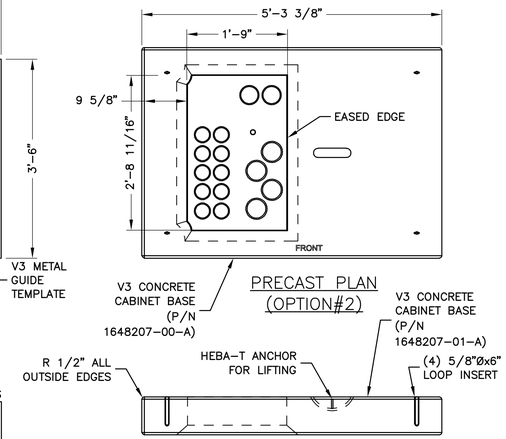


PRECAST PLAN
(OPTION#2)

PRECAST SECTION
(OPTION#2)

NOTES:

1. SEE CONCRETE NOTES ON SHEET GN–2.
2. DETAIL SHOWN AS TYPICAL FOR (1) V3 SUPERCHARGER CABINET. PAD TO BE INCREASED AS NEEDED FOR ADDITIONAL CABINETS OR ELECTRICAL EQUIPMENT.
3. CONTRACTOR TO PROVIDE A MIN OF 6" OF COMPACTED CRUSHED STONE FOR CAPILARY BREAK AND CONSTUCTION CONTROL UNDER ALL CONCRETE SLABS. CONTRACTOR SHALL IDENTIFY POOR DRAINING SOILS AND PROVIDE ADDITIONAL COMPACTED, WELL GRADED COURSE–GRANED SOIL BACKFILL TO FROST DEPTH. CONTRACTOR TO NOTIFY TESLA CM AND ENGINEER.

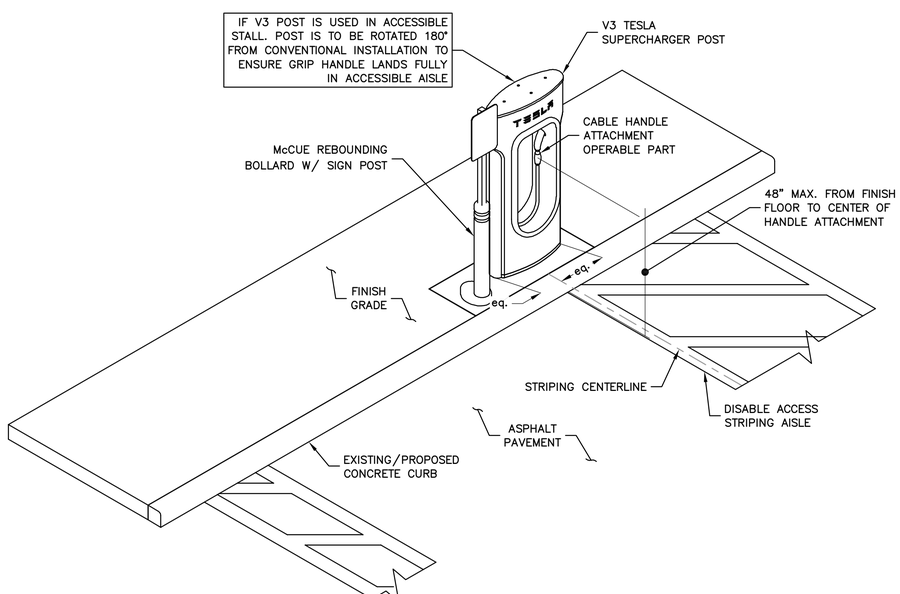


NOTE:

1. 54" MAX HEIGHT OF SUPERCHARGER HANDLE AT ACCESSIBLE CHARGE POSTS FROM SURFACE OF VEHICULAR WAY WHEN INSTALLED ON EXISTING CURBS.

## CABLE HANDLE ACCESSIBILITY ATTACHMENT DETAIL (3)

SCALE: N.T.S.

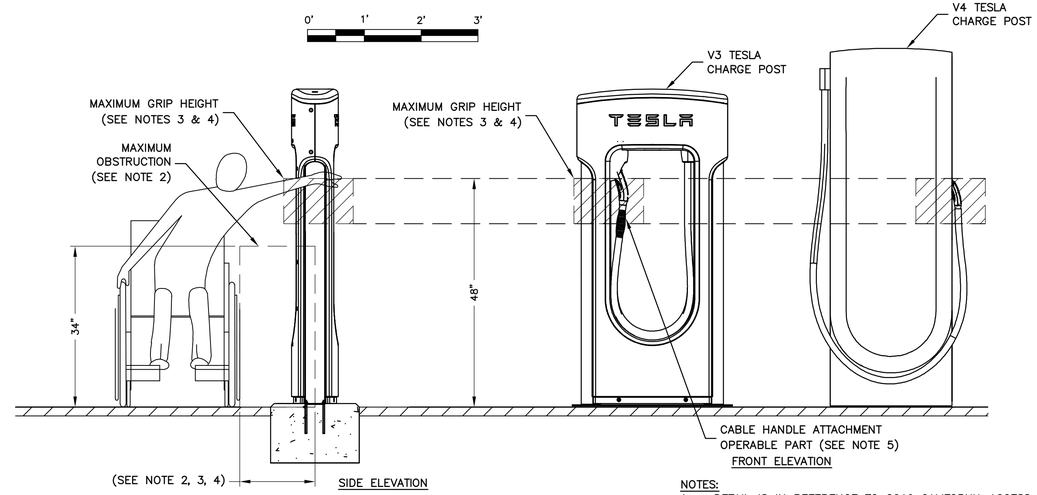


## GRAB HEIGHT DETAIL (4)

SCALE: N.T.S.

NOTES:

1. DETAIL IS IN REFERENCE TO 2019 CALIFORNIA ACCESS COMPLIANCE ADVISORY REFERENCE MANUAL.
2. PER CBC 11B 308.3.2, MAXIMUM OBSTRUCTION TO BE NO LARGER THAN 24 INCHES IN WIDTH AND 34 INCHES IN HEIGHT.
3. PER CBC 11B 308.3.2(A), THE HIGH SIDE REACH SHALL NOT EXCEED 48 INCHES MAXIMUM FOR A REACH DEPTH OF 10 INCHES MAXIMUM.
4. PER CBC 11B 308.3.2(B), WHERE THE REACH DEPTH EXCEEDS 10 INCHES, THE HIGH SIDE REACH SHALL NOT EXCEED 46 INCHES MAXIMUM FOR A REACH DEPTH OF 24 INCHES MAXIMUM.
5. OPERABLE PART OF CABLE HANDLE COMPLIES WITH REACH RANGES PER CBC 11B–308.
6. PER CBC 11B 308.3.2 EXCEPTIONS 2, OPERABLE PARTS OF CABLE HANDLE SHALL BE PERMITTED TO BE 54 INCHES MEASURED FROM THE SURFACE OF THE VEHICULAR WAY WHERE CABLE HANDLES ARE INSTALLED ON EXISTING CURBS.


TESLA
3500 DEER CREEK ROAD
PALO ALTO, CA 94304
(650) 681-5000

Dewberry
Dewberry Engineers Inc.
2835 BRANDYWINE ROAD
SUITE 100
ATLANTA, GA 30341-4015
PHONE: 678.530.002
GA LIC. NO. PEF002398 (6/30/2024)


GEORGIA REGISTERED No. PE045736 PROFESSIONAL ENGINEER MATTHEW C. SELKIRK 05/26/23

| | |
|---|---|
| DRAWN BY: | WG |
| CHECKED BY: | DSW |
| APPROVED BY: | MCS |
| PROJECT #: | 50123704 |
| JOB #: | 50163344 |

SUBMITTALS

| REV. | DATE | DESCRIPTION |
|---|---|---|
| | | |
| | | |
| | | |
| | | |
| | | |
| | | |
| | | |
| 0 | 05/26/23 | ISSUED FOR S&S |
| B | 05/17/23 | ISSUED FOR 90% REVIEW |
| A | 05/09/23 | ISSUED FOR 90% REVIEW |

SITE NAME:
DULUTH, GA – PEACHTREE INDUSTRIAL BLVD
(TRT ID: 27314)

SITE ADDRESS:
2220 PEACHTREE INDUSTRIAL BLVD
DULUTH, GA 30097

SHEET TITLE
CONSTRUCTION DETAILS II

SHEET NUMBER
C–6

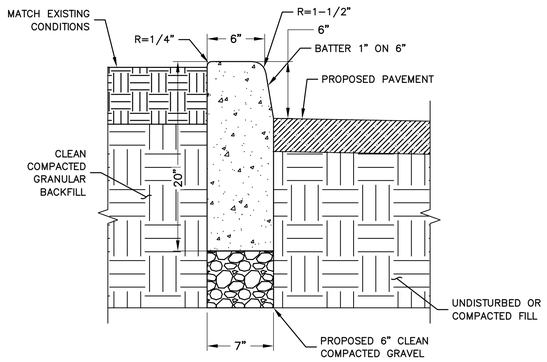


NOTES:

1. SAW CUT AREA TO BE REPAIRED/REPLACED. DISPOSE OF DEBRIS PROPERLY OFF SITE.
2. INSTALL FORMS AS NECESSARY.
3. COMPACT EXISTING SUBGRADE MATERIAL TO ACHIEVE 95% COMPACTION.
4. CONCRETE TO BE 4000 PSI AIR ENTRAINED CONCRETE.
5. INSTALL CONTROL JOINTS EVERY 10 LINEAR FEET.

## CONCRETE CURB DETAIL (1)

SCALE: N.T.S.

NOTE:
TRASH & RECYCLING BINS TO BE PROVIDED BY TESLA

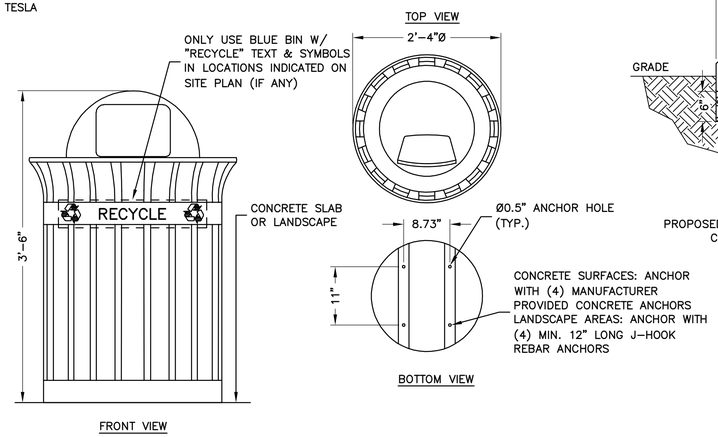


## WASTE MANAGEMENT BIN DETAIL (2)

SCALE: N.T.S.

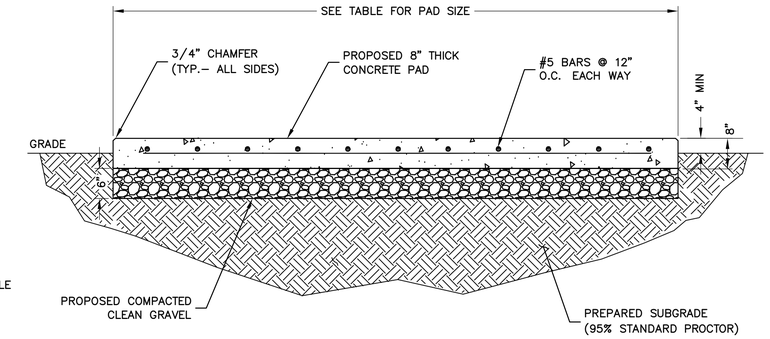


| CONCRETE PAD DIMENSIONS | | | | |
|---|---|---|---|---|
| PAD TYPE | L | W | t (THICKNESS) | AREA |
| CABINETS | 10'–0" | 8'–0" | 8" | 80.00 S.F. |
| SWITCHGEAR | 5'–0" | 4'–6" | 8" | 22.50 S.F. |

NOTE:

1. SEE CONCRETE NOTES ON SHEET GN–2.

## CONCRETE PAD DETAIL (3)

SCALE: N.T.S.

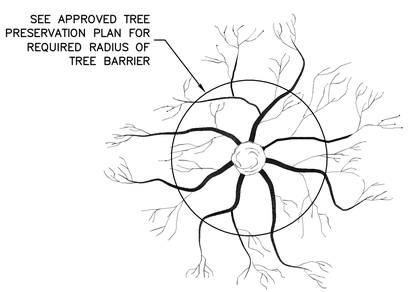


PLAN VIEW OF ROOT ZONE

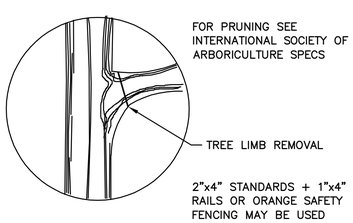


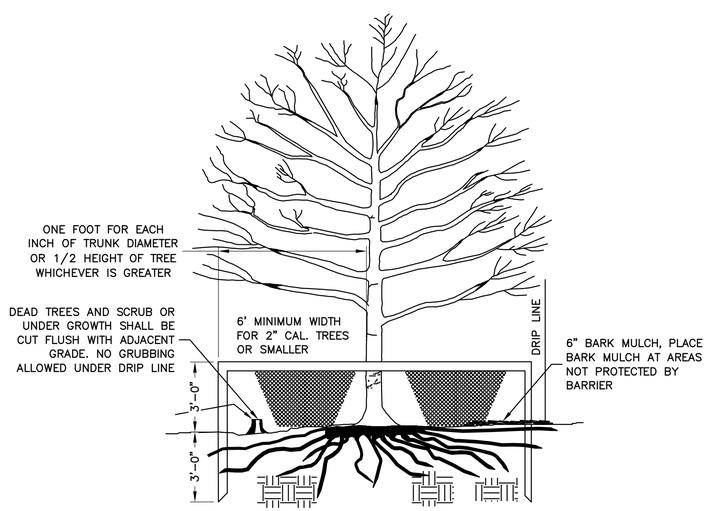


## TREE PROTECTION DETAIL (4)

SCALE: N.T.S.

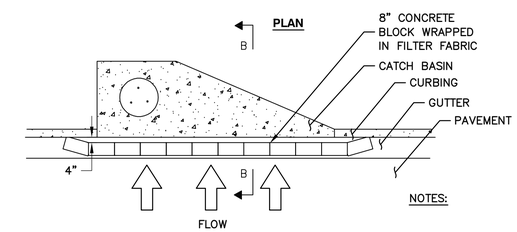


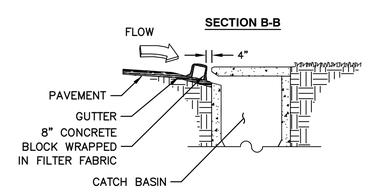


NOTES:

1. INSTALL FILTER AFTER ANY ASPHALT PAVEMENT INSTALLATION.
2. WRAP 8" CONCRETE BLOCKS IN FILTER FABRIC AND SPAN ACROSS CATCH BASIN INLET.
3. FACE OPENINGS IN BLOCKS OUTWARD.
4. LEAVE A GAP OF APPROXIMATELY 4" BETWEEN THE CURB AND THE FILTERS TO ALLOW FOR OVERFLOW TO PREVENT HAZARDOUS PONDING.
5. INSTALL OUTLET PROTECTION BELOW STORM DRAIN OUTLETS.

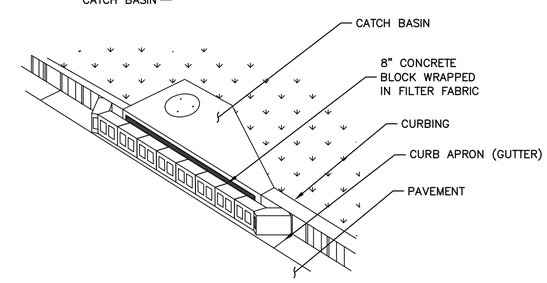


## CURB INLET "PIGS IN BLANKET" PROTECTION DETAIL (5)

SCALE: N.T.S.


TESLA
3500 DEER CREEK ROAD
PALO ALTO, CA 94304
(650) 681-5000

Dewberry®
Dewberry Engineers Inc.
2835 BRANDYWINE ROAD
SUITE 100
ATLANTA, GA 30341-4015
PHONE: 678.530.002
GA LIC. NO. PEF002398 (6/30/2024)


GEORGIA REGISTERED No. PE045736 PROFESSIONAL ENGINEER MATTHEW C. SELKIRK
05/26/23

| | |
|---|---|
| DRAWN BY: | WG |
| CHECKED BY: | DSW |
| APPROVED BY: | MCS |
| PROJECT #: | 50123704 |
| JOB #: | 50163344 |

SUBMITTALS

| REV. | DATE | DESCRIPTION |
|---|---|---|
| | | |
| | | |
| | | |
| | | |
| | | |
| | | |
| | | |
| 0 | 05/26/23 | ISSUED FOR S&S |
| B | 05/17/23 | ISSUED FOR 90% REVIEW |
| A | 05/09/23 | ISSUED FOR 90% REVIEW |

SITE NAME:
DULUTH, GA – PEACHTREE INDUSTRIAL BLVD
(TRT ID: 27314)

SITE ADDRESS:
2220 PEACHTREE INDUSTRIAL BLVD
DULUTH, GA 30097

SHEET TITLE
CONSTRUCTION DETAILS III

SHEET NUMBER
C–7

TÜVRheinland® Precisely Right.

**Letter Report**

TUV Rheinland of North America, Inc.
295 Foster St. #100
Littleton, MA 01460, USA
www.tuv.com

11/19/2021

Report No. 32195766.001
Project No. 234176170

Mr. Mark Edwards
Tesla, Inc.
3500 Deer Creek Rd
Palo Alto, CA 94304, USA

Tel: (678) 438 9475
Email: Markedwards@tesla.com

**Subject**: Duraline Conduits 2", 3" and 4" Testing

Dear Mr. Mark Edwards:

This letter report is to present the results of testing results of Duraline flexible conduit for Tesla supercharger station installation in accordance with the following standards:

- *ANSI/CAN/UL1660 Liquid-tight Flexible Nonmetallic Conduit, 6th Ed. dated 01/30/2019*
- *UL 651A Schedule 40 and 80 High Density Polyethylene (HDPE) Conduit, 5th Ed. dated 03/10/2017*
- *UL 1990 Nonmetallic Underground Conduit with Conductors, 3rd Ed. dated 01/20/2017*

The project was authorized by the signed PO #4900294467, dated 08/07/2021 for the project proposal # 234041515, the following tests have been completed by 11/02/2021 in the Duraline lab on Knoxville TN.

The following table lists completed tests in accordance with the standards UL 1990, UL 651A and UL 1660.

| No. | UL 1990 Clause | UL 651A Clause | UL 1660 Clause | Test description | Test Result |
|---|---|---|---|---|---|
| 1 | 10 | 11.3 | -- | Water absorption test | Pass |
| 2 | 11 | 9.3 | -- | Low temperature handling test | Pass |
| 3 | -- | -- | 5.6 | Tension | Pass |
| 4 | -- | -- | 5.5 | Deflection test | Pass |
| 5 | -- | -- | 5.4 | Cold Impact | Pass |
| 6 | 15 | 11.2 | 5.11 | Moisture penetration | Pass |
| 8 | 17 | -- | 5.16 | Direct burial crush test | Note |

Note

- As discussed with Duraline engineers, conduit stiffness varies with wall thickness per Table 5 in the standard ASTM F2160 – 16 Solid Wall High Density Polyethylene (HDPE) Conduit based on Controlled Outside Diameter (OD). The stiffness calculated for conduit 2", 3" and 4" are 101+/22 psi, 92+/-2 psi

M50009914 Attachment 1 Page 1 of 2 Rev. 0

TÜVRheinland® Precisely Right.

**Letter Report**

TUV Rheinland of North America, Inc.
295 Foster St. #100
Littleton, MA 01460, USA
www.tuv.com

and 61+/-2 psi. The test has been performed per ASTM 2412 as required by both UL 1990 and UL 1660. All samples were visually inspected and no any cracks observed on samples after the test. Those stiffness test data are reference for Tesla engineers to determine conduit burial depth for Tesla supercharger station installation.

The Duraline conduit test report is enclosed.

The above Duraline conduits can be used in the field installation of charge post CS-350-A2 per NEC with adequate depth calculation.

If there are any questions regarding the results contained in this report, or any of the other services offered by TUV Rheinland of North America, Inc., please do not hesitate to contact the undersigned.

Please note, this letter report does not represent authorization for the use of any TUV Rheinland certification marks.

Evaluated by:

Zhiyong Hu
Principal Test Engineer
Email:zhu@us.tuv.com

Reviewed by:

Howard Liu
Manager, Power Electronics Segment – Americas
Email:hliu@us.tuv.com

M50009914 Attachment 1 Page 2 of 2 Rev. 0

SPECIALTY

## SMOOTH-COR FLEX

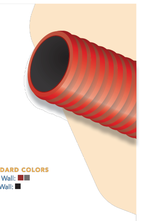

- Flexible: Reduces/eliminates the need for sweeps and bends
- Crush resistant: Equivalent to Schedule 40 PVC
- Lightweight: Easier installation, 40% lighter than PVC
- Compatibility: Easily adapts to other conduit materials
- Glueless coupling: Safe, quick assembly
- Gasketed: Air and watertight
- Low COF: Longer cable pulls with lower cable stress

| INSTALLATION TYPES | SIZE RANGE AVAILABLE | STANDARD COLORS |
|---|---|---|
| Underground | 2.0" | Outer Wall: ■ |
| Direct Bury | 3.0" | Inner Wall: ■ |
| Concrete Encasement | 4.0" | |

FEATURES

**STANDARD**

**DETAILS** Manufactured from flexible HDPE (High Density Polyethylene)

**SPECIFICATIONS** All Smooth-Cor Flex dimensions meet or exceed one or more of the following: ASTM D-3350, ASTM D-638, ASTM D-792, ASTM D-1238, ASTM D-1693

**CONDUIT MARKINGS** Permanent marking along conduit includes: material, relevant standards, production info, and sequential feet or meter markings.

**CO-EXTRUDED LINING** Corrugated exterior with a smooth, co-extruded inner layer

**PRE-INSTALLED TAPE** Factory pre-installed Bull-Line™ 1250lb Pull Tape comes standard in Smooth-Cor Flex on steel reels. Smooth-Cor Flex coils are only available as empty.

**OPTIONS**

**PACKAGING** Available on steel reels or 250' coils

dura-line +1 800 847 7661 WWW.DURALINE.COM TLC(DHC) orbia

DL SMOOTH-COR-FLEX 7-2022

NOTES:

1. DURALINE SMOOTH–COR FLEX CONDUIT HAS BEEN CERTIFIED AS A CRITICAL COMPONENT OF THE SUPERCHARGER POST BY TUV.
2. PRODUCT WILL BE USED TO CONNECT THE SUPERCHARGER CABINET TO SUPERCHARGER POST.
3. PRODUCT SHALL ONLY BE USED FOR HORIZONTAL RUNS WITHIN DC DISTRIBUTION TRENCH. FOR ALL VERTICAL TRANSITIONS INTO/OUT OF EQUIPMENT CONTRACTOR SHALL UTILIZES SCH.40 PVC CONDUIT AND TRANSITION TO DURALINE BELOW GRADE.

## DURALINE CONDUIT TUV CERTIFICATION (1)

SCALE: N.T.S.

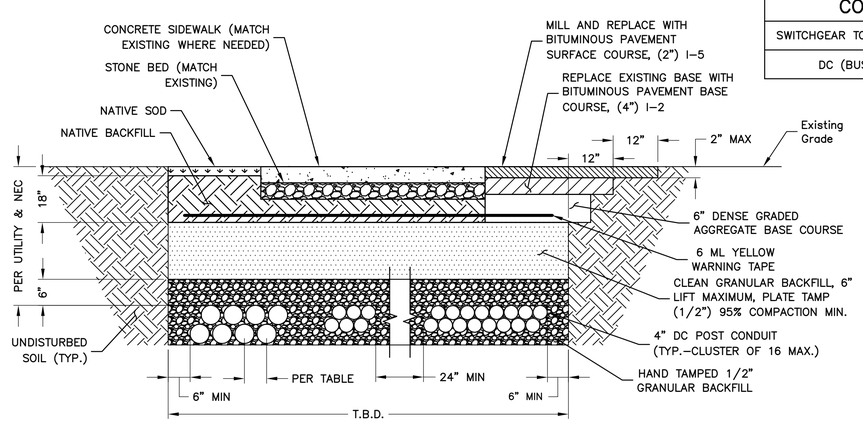


| MINIMUM CENTER TO CENTER CONDUIT SPACING | |
|---|---|
| SWITCHGEAR TO CABINETS | 7.5" O.C. |
| DC (BUSS) | 7.5" O.C. |

NOTES:

1. IF FREE OF ORGANIC OR OTHER DELETERIOUS MATERIAL, EXCAVATED MATERIAL MAY BE USED FOR BACKFILL.
2. IF NOT, PROVIDE CLEAN, COMPACTIBLE MATERIAL. COMPACT IN 8" LIFTS. REMOVE ANY LARGE ROCKS PRIOR TO BACKFILLING. CONTRACTOR TO VERIFY LOCATION OF EXISTING U/G UTILITIES PRIOR TO DIGGING.
3. CONCRETE ENCASE CONDUIT WHEN TRENCHING UNDER SITE ACCESS ROAD.
4. ANY PAVEMENT DAMAGE DURING CONSTRUCTION SHALL BE REPAIRED OR REPLACED BY THE CONTRACTOR TO PRE CONSTRUCTION CONDITIONS OR BETTER.
5. MAINTAIN 12" SEPARATION MIN. BETWEEN AC OR DC CONDUCTORS AND COMMUNICATION CABLES.
6. MAINTAIN 2" SEPARATION MINIMUM BETWEEN OUTER WALLS OF CONDUITS.
7. CONFIRM ALL DEPTHS W/UTILITY & NEC PRIOR TO CONSTRUCTION.

## TYP. BURIED CONDUIT TRENCH DETAILS (2)

SCALE: N.T.S.


TESLA
3500 DEER CREEK ROAD
PALO ALTO, CA 94304
(650) 681-5000

Dewberry®
Dewberry Engineers Inc.
2835 BRANDYWINE ROAD
SUITE 100
ATLANTA, GA 30341-4015
PHONE: 678.530.002
GA LIC. NO. PEF002398 (6/30/2024)

GEORGIA REGISTERED PROFESSIONAL ENGINEER No. PE045736 MATTHEW C. SELKIRK
05/26/23


| | |
|---|---|
| DRAWN BY: | WG |
| CHECKED BY: | DSW |
| APPROVED BY: | MCS |
| PROJECT #: | 50123704 |
| JOB #: | 50163344 |

SUBMITTALS

| REV. | DATE | DESCRIPTION |
|---|---|---|
| | | |
| | | |
| | | |
| | | |
| | | |
| | | |
| | | |
| 0 | 05/26/23 | ISSUED FOR S&S |
| B | 05/17/23 | ISSUED FOR 90% REVIEW |
| A | 05/09/23 | ISSUED FOR 90% REVIEW |

SITE NAME:
DULUTH, GA – PEACHTREE INDUSTRIAL BLVD
(TRT ID: 27314)

SITE ADDRESS:
2220 PEACHTREE INDUSTRIAL BLVD
DULUTH, GA 30097

SHEET TITLE
CONSTRUCTION DETAILS IV

SHEET NUMBER
C–8

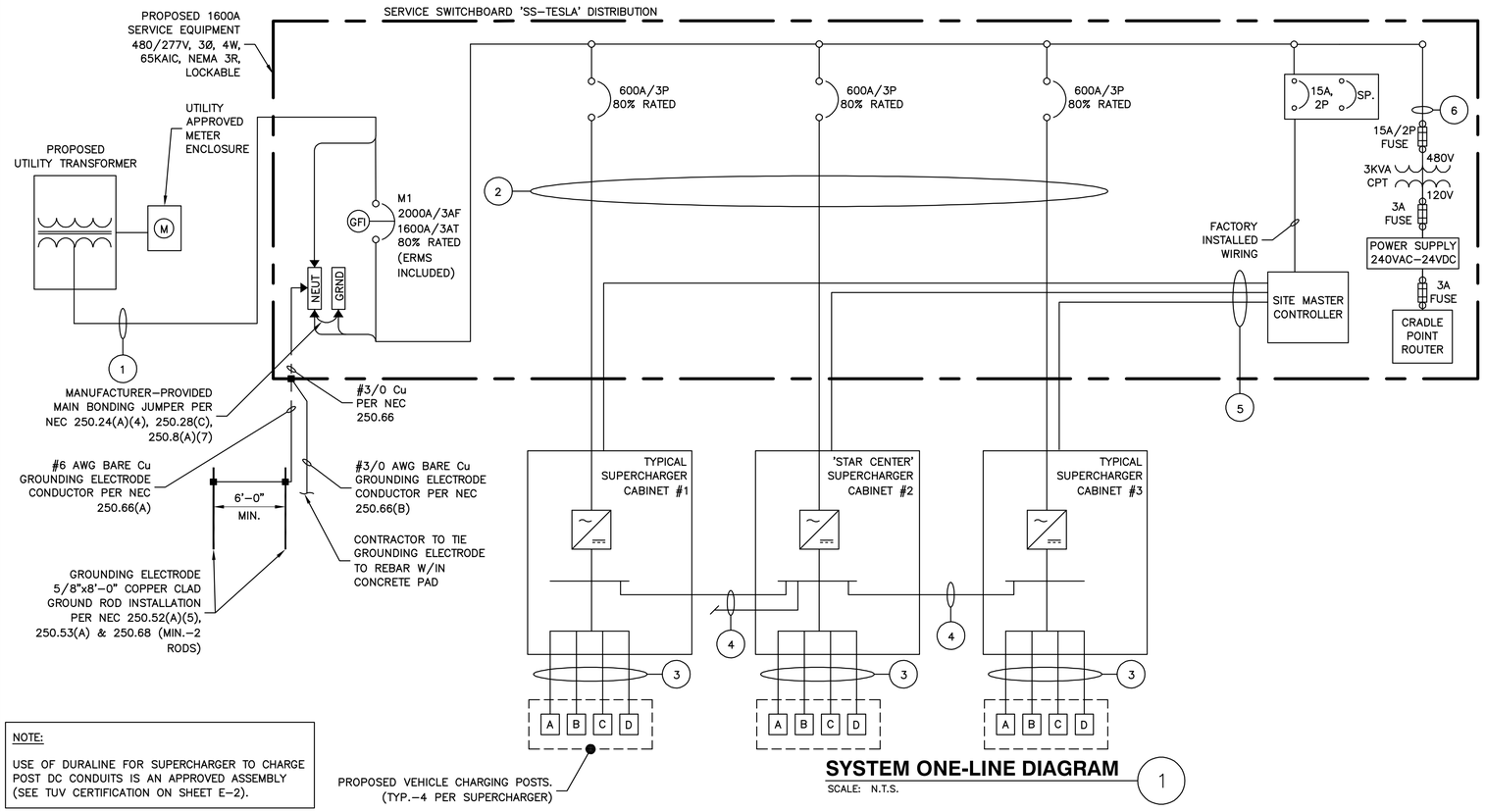


## SYSTEM ONE-LINE DIAGRAM

SCALE: N.T.S.

NOTE:

USE OF DURALINE FOR SUPERCHARGER TO CHARGE POST DC CONDUITS IS AN APPROVED ASSEMBLY (SEE TUV CERTIFICATION ON SHEET E-2).

## SERVICE ELECTRICAL CIRCUIT SCHEDULE

| NO: | FROM | TO | CONFIGURATION |
|---|---|---|---|
| 1 | UTILITY TRANSFORMER | PROPOSED SERVICE EQUIPMENT: INCOMING | [5 SETS] (3) 600MCM AL (THWN-2) & (1) 600MCM AL (THWN-2) NEUT IN 4" PVC CONDUIT |
| 2 | PROPOSED SERVICE EQUIPMENT: PANEL (600A, 80% RATED) | PROPOSED TESLA SUPERCHARGER | [2 SETS:] (3) 500MCM AL (THWN-2) (1) 500MCM AL (THWN-2) NEUT (1) #1 CU OR 2/0 AL EGC* IN 4" PVC/HDPE CONDUIT** |
| 3A | PROPOSED TESLA SUPERCHARGER | PROPOSED TESLA POST (TYP.-12) V3 CHARGE POST*** | [1 SET PER CHARGING POST] (4) 350MCM AL (XHHW-2) (1000V), (1) #1 AWG CU OR #2/0 AWG AL EGC*, & (1) 1000V SHIELDED COMM CABLE (PER TESLA) IN 4" PVC/HDPE CONDUIT** |
| 3B | PROPOSED TESLA SUPERCHARGER | PROPOSED TESLA POST (TYP.-12) ALT. CHARGE POST*** | [1 SET PER CHARGING POST] (4) 600MCM AL (XHHW-2) (1000V), (1) #2/0 AWG CU EGC (2) #6 AWG CU (1000V), & (1) 1000V SHIELDED COMM CABLE (PER TESLA) IN 4" PVC/HDPE CONDUIT** |
| 4 | DC BUS BETWEEN PROPOSED SUPERCHARGERS | DC BUS BETWEEN PROPOSED SUPERCHARGERS | [2 SETS] (2) 600MCM AL (XHHW-2) (1) 1/0 CU GROUND & (1) 3/0 AWG AL DC MID 1000V RATED IN 3" PVC |
| 5 | SITE CONTROLLER | SUPERCHARGER (TYP.) | SHIELDED CAT6E IN 1" CONDUIT** |
| 6 | PROPOSED SERVICE EQUIPMENT: PANEL 15(A) | PROPOSED CRADLEPOINT ROUTER | INTERNALLY WIRED CONTROL CIRCUIT (BY MANUFACTURER) |

* MODIFIED PER NEC 250.64(A)(2)
** PER UL 615A AND NEC 253, LISTED HDPE CONDUIT PERMITTED. CONTRACTOR TO CONFIRM USE W/ TESLA CM
*** CONTRACTOR TO INSTALL APPLICABLE WIRING CONFIGURATION DEPENDING ON CHARGE POST TYPE INSTALLED ON SITE

## AC SUPERCHARGER LENGTHS

| SUPERCHARGER | LINEAR LENGTH BREAKER PANEL TO SUPERCHARGER | ESTIMATED LENGTH* |
|---|---|---|
| 1 | 10' | 35' |
| LENGTH OF AC AL WIRE PER CONDUIT**: | | 140' |
| TOTAL NUMBER OF CONDUITS: | | 2 |
| LENGTH OF AC AL WIRE ***: | | 280' |
| 2 | 7' | 32' |
| LENGTH OF AC AL WIRE PER CONDUIT**: | | 128' |
| TOTAL NUMBER OF CONDUITS: | | 2 |
| LENGTH OF AC AL WIRE***: | | 256' |
| 3 | 10' | 35' |
| LENGTH OF AC AL WIRE PER CONDUIT**: | | 140' |
| TOTAL NUMBER OF CONDUITS: | | 2 |
| LENGTH OF AC AL WIRE***: | | 280' |
| TOTAL LENGTH OF AC AL WIRE****: | | 816' |
| TOTAL LENGTH OF EGC*****: | | 204' |

NOTES:

* AC CONDUCTORS: 25 FT IS ADDED TO THE HORIZONTAL RUN LENGTH TO ACCOUNT FOR BURIED DEPTH & TRANSITIONS.

** ESTIMATED LENGTH OF Al WIRE = SUM OF ESTIMATED LENGTH X 4 WIRES PER SUPERCHARGER

*** LENGTH = LENGTH OF AC AL WIRE PER CONDUIT X # OF CONDUITS

**** TOTAL LENGTH = SUM OF AC LENGTHS

***** TOTAL LENGTH OF EGC = LENGTH X # SETS

## DC CHARGING POST LENGTHS

| SUPERCHARGER | CHARGE POST | LINEAR LENGTH | ESTIMATED DC WIRE LENGTH* |
|---|---|---|---|
| 1 | 1A | 75' | 97' |
| | 1B | 63' | 85' |
| | 1C | 54' | 76' |
| | 1D | 45' | 67' |
| 2 | 2A | 36' | 58' |
| | 2B | 27' | 49' |
| | 2C | 14' | 36' |
| | 2D | 26' | 48' |
| 3 | 3A | 49' | 71' |
| | 3B | 58' | 80' |
| | 3C | 67' | 89' |
| | 3D | 76' | 98' |
| CONDUIT LENGTH: | | | 854' |
| TOTAL CONDUCTOR LENGTH**: | | | 3416' |
| TOTAL LENGTH OF EGC & COMM CABLE: | | | 854' |

NOTES:

1. ANY DC RUN OVER 340' SHALL BE BROUGHT TO THE ATTENTION OF TESLA CM.

* 22 FT IS ADDED TO THE HORIZONTAL RUN LENGTH TO ACCOUNT FOR BURIED DEPTH & TRANSITIONS.

** ESTIMATED LENGTH OF DC AL WIRE = SUM OF ESTIMATED LENGTH X 4 WIRES PER SUPERCHARGER

## BREAKER TRIP SETTINGS

2000A MAIN BREAKER (SET FOR 1600A):
(ABB CAT No.: Z2SFUKBFZ0LA000000XX)
- Ir (LTPU) = 0.8
- Tr (LT BAND) = CURVE D
- Isd (STPU) = 8
- tsd (ST BAND) = CURVE A (OUT)
- Ii (INST) = 12
- Ig (GROUND PICK UP) = 0.4
- tg (GROUND BAND) = CURVE C

600A SUPERCHARGER BREAKER:
(ABB CAT No.: XT5HU360BBFN00HXXX)
- INST. = MED

## SCOPE OF WORK

| UTILITY | GEORGIA POWER | | |
|---|---|---|---|
| CATEGORY | ITEMS | TESLA | UTILITY |
| PRIMARY | PRIMARY TRENCHING | | X |
| | INSTALL PRIMARY CONDUIT | | X |
| | INSTALL PULL ROPE | | X |
| | PROVIDE PRIMARY FEEDERS | | X |
| | INSTALL PRIMARY FEEDERS | | X |
| | PROVIDE ROAD CUTS/ROAD BORES | X | |
| | PAVEMENT REPLACEMENT | X | |
| TRANSFORMER | INSTALL TRANSFORMER PAD | | X |
| | PROVIDE TRANSFORMER | | X |
| | INSTALL TRANSFORMER | | X |
| | INSTALL CONNECTIONS-PRIMARY | | X |
| | INSTALL CONNECTIONS-SECD | | X |
| SWITCHBOARD | PROVIDE METER | | X |
| | INSTALL METER | X | |
| | LAND SECONDARY FEEDERS | X | |
| SECONDARY | SECONDARY TRENCHING | X | |
| | INSTALL SECONDARY CONDUIT | X | |
| | INSTALL PULL ROPE | X | |
| | PROVIDE SECONDARY FEEDERS | X | |
| | INSTALL SECONDARY FEEDERS | X | |
| | PROVIDE ROAD CUTS/ROAD BORES | X | |
| | PAVEMENT REPLACEMENT | X | |

NOTES:

1. CONDUCTOR LENGTHS ARE ESTIMATES ONLY. FINAL CONDUCTOR ROUTING PATH AND LENGTHS SHALL BE DETERMINED BY THE CONTRACTOR IN THE FILED BASED ON PHYSICAL MEASUREMENTS. CONTRACTOR TO ORDER CONDUCTORS BASED ON FIELD MEASUREMENTS (MUST BE APPROVED BY TESLA INSTALLATION MANAGER).
2. ALL ELECTRICAL WORK AND RELATED ACTIVITIES PREFORMED ON-SITE SHALL BE DONE IN ACCORDANCE WITH NATIONAL ELECTRIC CODE (NEC) AND UTILITY COMPANY STANDARDS.
3. NEUTRAL MUST BE INCLUDED FOR PROPER OPERATION OF TESLA SUPERCHARGERS.
4. ALL CONDUCTORS TO RECEIVE ANTI-OXIDATIVE COATING DURING INSTALLATION.
5. ALL EQUIPMENT SHALL BE HOUSED IN LOCKABLE, NEMA 3R ENCLOSURE.

## SECONDARY SERVICE LENGTHS

| | | |
|---|---|---|
| TRANSFORMER TO SWITCHGEAR | 44' | 69' |
| TOTAL LENGTH OF AC AL WIRE**: | | 276' |
| NUMBER OF WIRE SETS: | | 6 |
| TOTAL LENGTH OF AL WIRE***: | | 1,656' |

NOTES:

1. SEE SHEET E-2 FOR WIRE CONFIGURATION.

* AC CONDUCTORS: 25 FT IS ADDED TO THE HORIZONTAL RUN LENGTH TO ACCOUNT FOR BURIED DEPTH & TRANSITIONS.

** ESTIMATED LENGTH OF Al WIRE = SUM OF ESTIMATED LENGTH X 4 WIRES PER SET

*** LENGTH OF AL WIRE PER DISCONNECT =ESTIMATED TOTAL LENGTH OF AL WIRE X # WIRE SETS

6. USE OF DURALINE FOR SUPERCHARGER TO CHARGE POST DC CONDUITS IS AN APPROVED ASSEMBLY
7. DC RUN LENGTH MAXIMUM IS 340' INCLUDING BURIED DEPTH. ANY DC RUN LENGTHS OVER THE MAXIMUM SHALL BE IMMEDIATELY BROUGHT TO THE ATTENTION OF TESLA.
8. UTILITY EQUIPMENT INSTALLATIONS AND PREP WORK SHALL BE COORDINATED WITH THE APPROPRIATE UTILITY ENGINEER AT TIME OF PRE CONSTRUCTION MEETING TO ENSURE ACCURACY OF INSTALLATION.
9. UTILITY CONDUITS, CONNECTORS, TRANSFORMER PAD & TRANSFORMER FOUNDATION TO BE INSTALLED PER UTILITY SPECIFICATION. CONFIRM LATEST SPECIFICATIONS PRIOR TO CONSTRUCTION.
10. EXISTING UNDERGROUND UTILITIES LOCATED WITHIN AREA OF PROPOSED TRENCH & EQUIPMENT SITE AREA. HAND DIG AND RELOCATE AS REQUIRED.
11. CONTRACTOR RESPONSIBLE FOR ALL TRAFFIC SAFETY MEASURES THROUGHOUT DURATION OF CONSTRUCTION. COORDINATE ANY ACCESS ROAD CLOSURES W/OWNER.
12. CONTRACTOR TO GROUND SYSTEM TO CONCRETE-ENCASED GROUNDING ELECTRODE PER NEC 250.50. GROUNDING RESISTANCE SHALL BE LESS THAN 25Ω PER NEC. CONTRACTOR TO ADD GROUND RODS TO SYSTEM UNTIL PROPER RESISTANCE IS MET.
13. THE DC BUS SHALL BE CONFIGURED IN A RADIAL FASHION WHERE ALL CONDUCTORS ROUTE FROM EACH 'TYPICAL' SUPERCHARGER CABINET, TO THE ONE, 'STAR-CENTER' SUPERCHARGER CABINET.
14. USE OF DURALINE FOR SUPERCHARGER TO CHARGE POST DC CONDUITS IS AN APPROVED ASSEMBLY. (SEE TUV CERTIFICATION ON SHEET E-2).


TESLA
3500 DEER CREEK ROAD
PALO ALTO, CA 94304
(650) 681-5000

Dewberry®
Dewberry Engineers Inc.
2835 BRANDYWINE ROAD
SUITE 100
ATLANTA, GA 30341-4015
PHONE: 678.530.002
GA LIC. NO. PEF002398 (6/30/2024)


GEORGIA REGISTERED No. PE045736 PROFESSIONAL ENGINEER MATTHEW C. SELKIRK 05/26/23

| | |
|---|---|
| DRAWN BY: | WG |
| CHECKED BY: | DSW |
| APPROVED BY: | MCS |
| PROJECT #: | 50123704 |
| JOB #: | 50163344 |

## SUBMITTALS

| REV. | DATE | DESCRIPTION |
|---|---|---|
| 0 | 05/26/23 | ISSUED FOR S&S |
| B | 05/17/23 | ISSUED FOR 90% REVIEW |
| A | 05/09/23 | ISSUED FOR 90% REVIEW |

SITE NAME:
DULUTH, GA - PEACHTREE INDUSTRIAL BLVD
(TRT ID: 27314)

SITE ADDRESS:
2220 PEACHTREE INDUSTRIAL BLVD
DULUTH, GA 30097

SHEET TITLE
ELECTRICAL ONE-LINE DIAGRAM

SHEET NUMBER
E-1

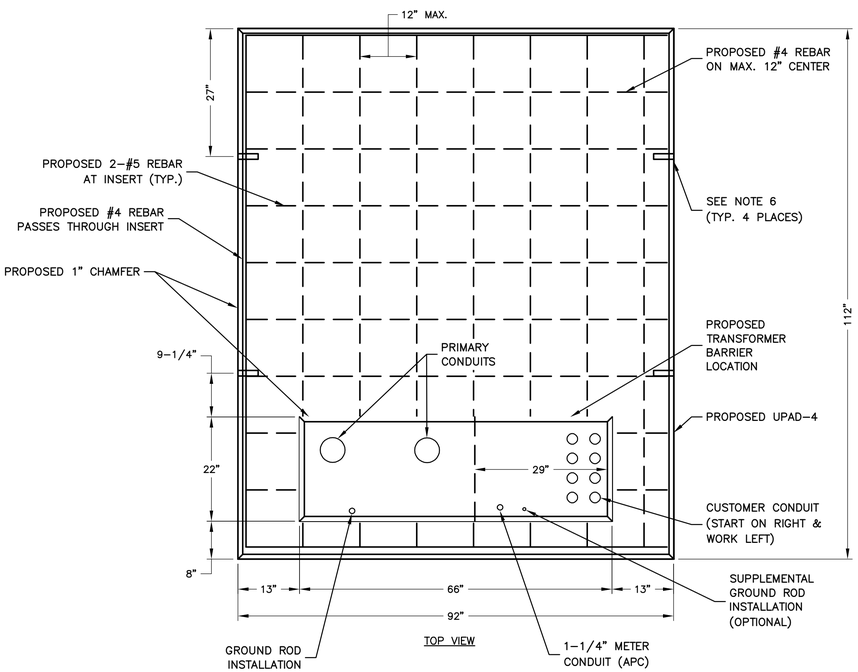


TOP VIEW

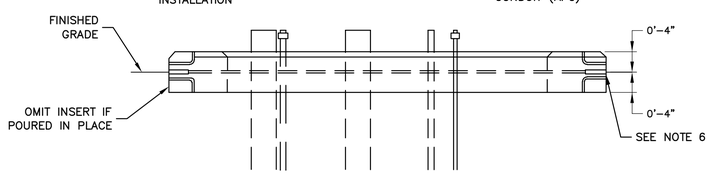


SIDE VIEW

PRECAST OR POURED IN PLACE CONCRETE PAD FOR 3 PHASE PAD-MOUNTED TRANSFORMER, 12 KV THRU 25 KV PRIMARY VOLTAGE, 500 KVA TO 2500 KVA RADIAL STEP-UP/DOWN, 500-3750 KVA LOOP FEED

## TRANSFORMER PAD (1)

SCALE: 3/8"=1' FOR 11"x17"
3/4"=1' FOR 22"x34"

0' 1' 2' 3'

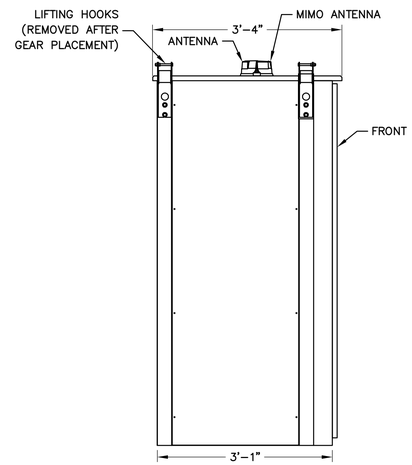


LEFT-SIDE VIEW
(END SECTION)

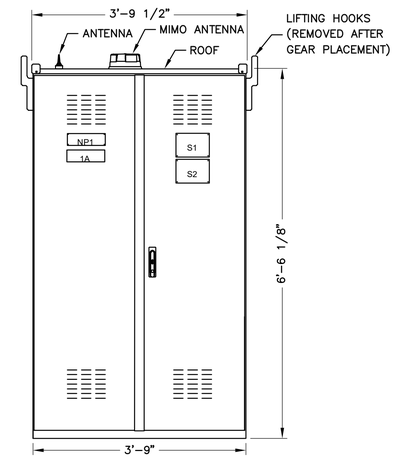


FRONT VIEW
(EXTERIOR DOORS SHOWN)

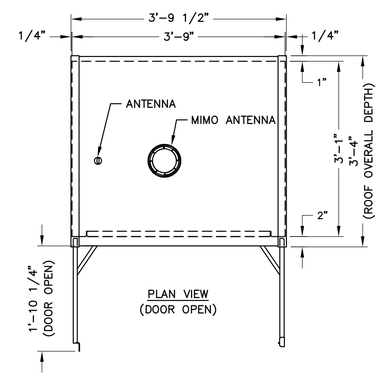


PLAN VIEW
(DOOR OPEN)

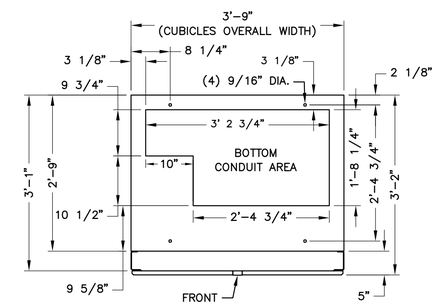


SECTION X-X
ANCHOR BOLT LOCATIONS & BOTTOM CONDUIT AREA

## 1600A EV-2 MCB SWITCHBOARD (2)

SCALE: 3/8"=1' FOR 11"x17"
3/4"=1' FOR 22"x34"

0' 1' 2' 3'

UTILITY NOTES:

1. MAINTAIN 2 IN. OF CLEAR CONCRETE BETWEEN REBAR AND ALL OUTER SURFACES.
2. REINFORCE WITH No 4 REBARS WITH 12"x12" GRID, 4 IN. BELOW TOP OF PAD EXCEPT AS SHOWN ABOVE.
3. CONCRETE SHALL HAVE A MINIMUM ULTIMATE 28 DAY COMPRESSIVE STRENGTH OF NOT LESS THAN 3,000 PSI, PAD SHALL BE CURED NOT LESS THAN 72 HOURS.
4. AVERAGE WEIGHT OF PAD IS 5,800 POUNDS.
5. MOUNTING SURFACE SHALL BE LEVEL, SMOOTH AND UNIFORM WITH MINIMAL IRREGULARITIES.
6. LIFTING INSERT FOR 1 IN. DIAMETER THREADED BOLT, 4" DEPTH, MEADOW BURKE FX-14, 4 LOCATIONS (OMIT IF POURED IN PLACE).

* 66" OPENING INCLUDES CHAMFER.

NOTES:

1. SPECIFICATION BASED ON GEORGIA POWER SPECIFICATION A-SUH16001 PRECAST OR POURED IN PLACE CONCRETE PAD FOR 3 PHASE PAD-MOUNTED TRANSFORMER.
2. CONTRACTOR TO VERIFY APPROVED VENDORS W/ UTILITY IF ORDERING PRECAST FOUNDATION.
3. CONTRACTOR TO CONFIRM LATEST SPECIFICATIONS W/ UTILITY PRIOR TO CONSTRUCTION OR ORDERING.


TESLA
3500 DEER CREEK ROAD
PALO ALTO, CA 94304
(650) 681-5000

Dewberry®
Dewberry Engineers Inc.
2835 BRANDYWINE ROAD
SUITE 100
ATLANTA, GA 30341-4015
PHONE: 678.530.002
GA LIC. NO. PEF002398 (6/30/2024)


GEORGIA REGISTERED No. PE045736 PROFESSIONAL ENGINEER MATTHEW C. SELKIRK 05/26/23

| | |
|---|---|
| DRAWN BY: | WG |
| CHECKED BY: | DSW |
| APPROVED BY: | MCS |
| PROJECT #: | 50123704 |
| JOB #: | 50163344 |

SUBMITTALS

| REV. | DATE | DESCRIPTION |
|---|---|---|
| | | |
| | | |
| | | |
| | | |
| | | |
| | | |
| | | |
| 0 | 05/26/23 | ISSUED FOR S&S |
| B | 05/17/23 | ISSUED FOR 90% REVIEW |
| A | 05/09/23 | ISSUED FOR 90% REVIEW |

SITE NAME:
DULUTH, GA - PEACHTREE INDUSTRIAL BLVD
(TRT ID: 27314)

SITE ADDRESS:
2220 PEACHTREE INDUSTRIAL BLVD
DULUTH, GA 30097

SHEET TITLE
ELECTRICAL & UTILITY DETAILS

SHEET NUMBER
E-2

## DANGER

NO SAFE PPE EXISTS

ENERGIZED WORK PROHIBITED

| | |
|---|---|
| 305 in | Arc Flash Boundary |
| 110.0 cal/cm^2 | Incident Energy at 18 in |
| PPE | DO NOT WORK ON LIVE! |
| 480 VAC | Shock Risk when cover is removed |
| 00 | Glove Class |
| 42 in | Limited Approach |
| 12 in | Restricted Approach |
| N/A | Minimum Arc Rating |

Location: MAIN SWBD - LINE SIDE

V4 TESLA SUPERCHARGER_DULUTH, GA - 1600A MCB
(3) V4 Chargers & (12) Posts
2220 PEACHTREE INDUSTRIAL BLVD
DULUTH, GA 30097

| TRT- 27314 | Prepared on: | 05/09/23 | By: Tesla |
|---|---|---|---|

Warning: Changes in equipment settings or system configuration will invalidate the calculated values and PPE requirements

## WARNING

Arc Flash and Shock Risk

Appropriate PPE Required

| | |
|---|---|
| 19 in | Arc Flash Boundary |
| 1.35 cal/cm^2 | Incident Energy at 18 in |
| PPE | Arc-rated shirt & pants + arc-rated coverall + arc-rated arc flash suit |
| 480 VAC | Shock Risk when cover is removed |
| 00 | Glove Class |
| 42 in | Limited Approach |
| 12 in | Restricted Approach |
| 12 cal/cm^2 | Minimum Arc Rating |

Location: SUPERCHARGER

V4 TESLA SUPERCHARGER_DULUTH, GA - 1600A MCB
(3) V4 Chargers & (12) Posts
2220 PEACHTREE INDUSTRIAL BLVD
DULUTH, GA 30097

| TRT- 27314 | Prepared on: | 05/09/23 | By: Tesla |
|---|---|---|---|

Warning: Changes in equipment settings or system configuration will invalidate the calculated values and PPE requirements

## WARNING

Arc Flash and Shock Risk

Appropriate PPE Required

| | |
|---|---|
| 19 in | Arc Flash Boundary |
| 1.35 cal/cm^2 | Incident Energy at 18 in |
| PPE | Arc-rated shirt & pants + arc-rated coverall + arc-rated arc flash suit |
| 480 VAC | Shock Risk when cover is removed |
| 00 | Glove Class |
| 42 in | Limited Approach |
| 12 in | Restricted Approach |
| 12 cal/cm^2 | Minimum Arc Rating |

Location: SUPERCHARGER

V4 TESLA SUPERCHARGER_DULUTH, GA - 1600A MCB
(3) V4 Chargers & (12) Posts
2220 PEACHTREE INDUSTRIAL BLVD
DULUTH, GA 30097

| TRT- 27314 | Prepared on: | 05/09/23 | By: Tesla |
|---|---|---|---|

Warning: Changes in equipment settings or system configuration will invalidate the calculated values and PPE requirements

## WARNING

Arc Flash and Shock Risk

Appropriate PPE Required

| | |
|---|---|
| 33 in | Arc Flash Boundary |
| 3.19 cal/cm^2 | Incident Energy at 18 in |
| PPE | Arc-rated shirt & pants + arc-rated coverall + arc-rated arc flash suit |
| 480 VAC | Shock Risk when cover is removed |
| 00 | Glove Class |
| 42 in | Limited Approach |
| 12 in | Restricted Approach |
| 12 cal/cm^2 | Minimum Arc Rating |

Location: MAIN SWITCHBOARD SB-1

V4 TESLA SUPERCHARGER_DULUTH, GA - 1600A MCB
(3) V4 Chargers & (12) Posts
2220 PEACHTREE INDUSTRIAL BLVD
DULUTH, GA 30097

| TRT- 27314 | Prepared on: | 05/09/23 | By: Tesla |
|---|---|---|---|

Warning: Changes in equipment settings or system configuration will invalidate the calculated values and PPE requirements

## WARNING

Arc Flash and Shock Risk

Appropriate PPE Required

| | |
|---|---|
| 19 in | Arc Flash Boundary |
| 1.35 cal/cm^2 | Incident Energy at 18 in |
| PPE | Arc-rated shirt & pants + arc-rated coverall + arc-rated arc flash suit |
| 480 VAC | Shock Risk when cover is removed |
| 00 | Glove Class |
| 42 in | Limited Approach |
| 12 in | Restricted Approach |
| 12 cal/cm^2 | Minimum Arc Rating |

Location: SUPERCHARGER

V4 TESLA SUPERCHARGER_DULUTH, GA - 1600A MCB
(3) V4 Chargers & (12) Posts
2220 PEACHTREE INDUSTRIAL BLVD
DULUTH, GA 30097

| TRT- 27314 | Prepared on: | 05/09/23 | By: Tesla |
|---|---|---|---|

Warning: Changes in equipment settings or system configuration will invalidate the calculated values and PPE requirements

**ARC FLASH LABELS** (1)
SCALE: N.T.S.


TESLA
3500 DEER CREEK ROAD
PALO ALTO, CA 94304
(650) 681-5000

Dewberry®
Dewberry Engineers Inc.
2835 BRANDYWINE ROAD
SUITE 100
ATLANTA, GA 30341-4015
PHONE: 678.530.002
GA LIC. NO. PEF002398 (6/30/2024)


GEORGIA REGISTERED PROFESSIONAL ENGINEER No. PE045736 MATTHEW C. SELKIRK
05/26/23

| | |
|---|---|
| DRAWN BY: | WG |
| CHECKED BY: | DSW |
| APPROVED BY: | MCS |
| PROJECT #: | 50123704 |
| JOB #: | 50163344 |

SUBMITTALS

| REV. | DATE | DESCRIPTION |
|---|---|---|
| 0 | 05/26/23 | ISSUED FOR S&S |
| B | 05/17/23 | ISSUED FOR 90% REVIEW |
| A | 05/09/23 | ISSUED FOR 90% REVIEW |

SITE NAME:
DULUTH, GA – PEACHTREE INDUSTRIAL BLVD
(TRT ID: 27314)

SITE ADDRESS:
2220 PEACHTREE INDUSTRIAL BLVD
DULUTH, GA 30097

SHEET TITLE
ARC FLASH LABELS

SHEET NUMBER
E–3

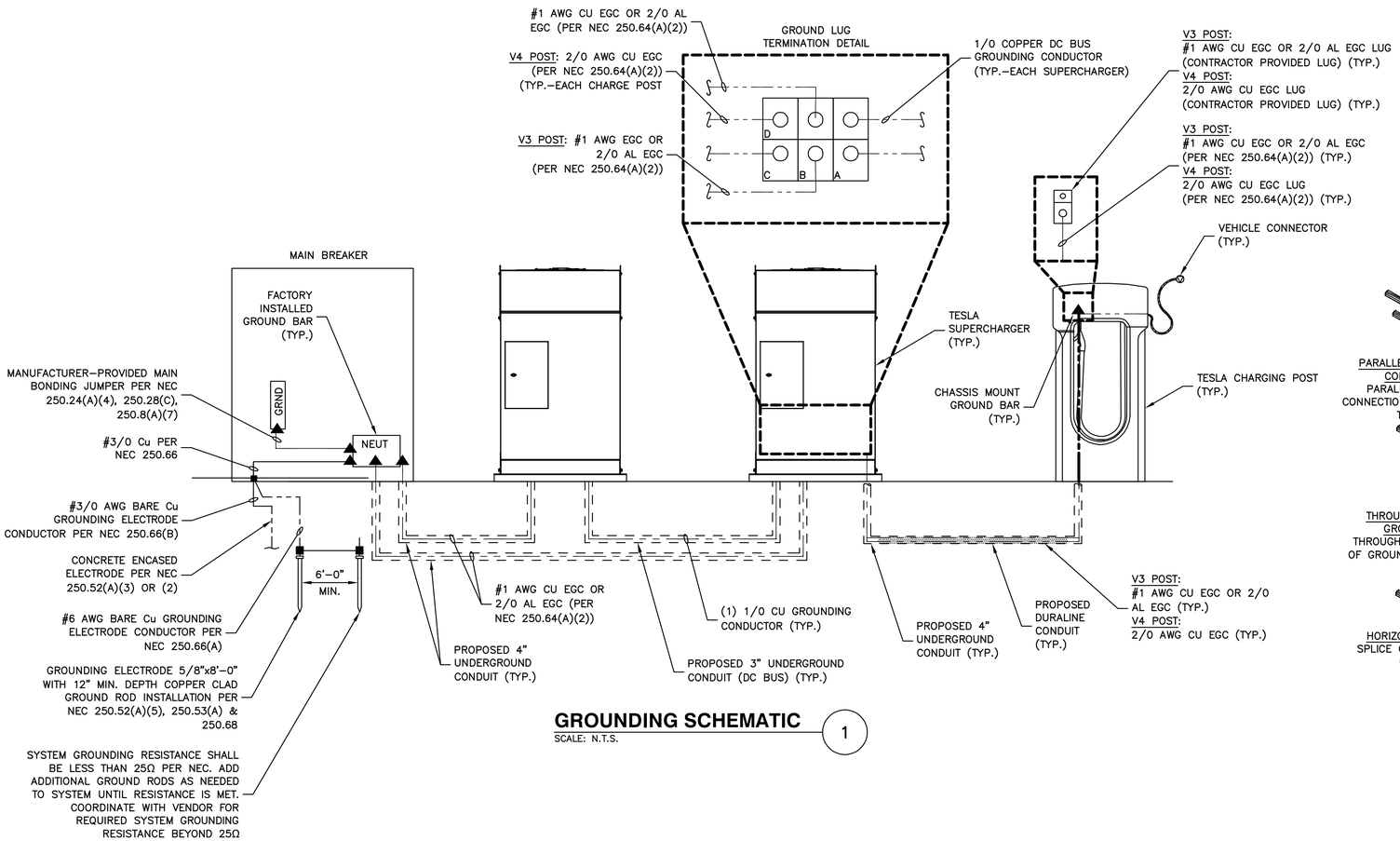


## GROUNDING SCHEMATIC (1)

SCALE: N.T.S.

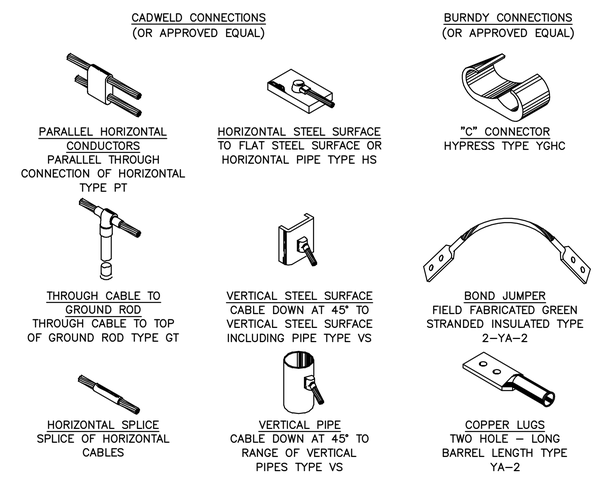


## GROUND CONNECTION DETAILS (2)

SCALE: N.T.S.

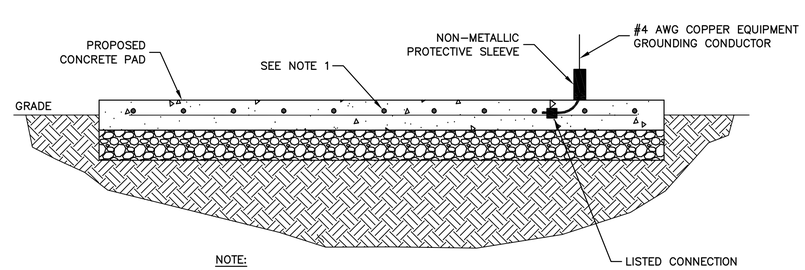


NOTE:

1. REBAR BONDED TOGETHER WITH STEEL TIE WIRES.

## CONCRETE ENCASED ELECTRODE DETAIL (3)

SCALE: N.T.S.


TESLA
3500 DEER CREEK ROAD
PALO ALTO, CA 94304
(650) 681-5000

Dewberry
Dewberry Engineers Inc.
2835 BRANDYWINE ROAD
SUITE 100
ATLANTA, GA 30341-4015
PHONE: 678.530.002
GA LIC. NO. PEF002398 (6/30/2024)


GEORGIA REGISTERED No. PE045736 PROFESSIONAL ENGINEER MATTHEW C. SELKIRK 05/26/23

| | |
|---|---|
| DRAWN BY: | WG |
| CHECKED BY: | DSW |
| APPROVED BY: | MCS |
| PROJECT #: | 50123704 |
| JOB #: | 50163344 |

SUBMITTALS

| REV. | DATE | DESCRIPTION |
|---|---|---|
| | | |
| | | |
| | | |
| | | |
| | | |
| | | |
| | | |
| 0 | 05/26/23 | ISSUED FOR S&S |
| B | 05/17/23 | ISSUED FOR 90% REVIEW |
| A | 05/09/23 | ISSUED FOR 90% REVIEW |

SITE NAME:
DULUTH, GA – PEACHTREE INDUSTRIAL BLVD
(TRT ID: 27314)

SITE ADDRESS:
2220 PEACHTREE INDUSTRIAL BLVD
DULUTH, GA 30097

SHEET TITLE
GROUNDING PLAN, SCHEMATIC & DETAILS

SHEET NUMBER
G–1